ICOM®

SERVICE MANUAL

VHF TRANSCEIVERS

IC-F33GT/GS
IC-F34GT/GS

Icom Inc.

INTRODUCTION

This service manual describes the latest service information for the **IC-F33GT/GS and IC-F34GT/GS** VHF TRANSCEIVERS at the time of publication.

MODEL	CHANNEL SPACING	SYMBOL	FREQUENCY
IC–F33GT	15.0/30.0 kHz	USA-01	136–174 MHz
	12.5/25.0 kHz	GEN-01	136–174 MHz
IC–F34GT	12.5/20.0/25.0 kHz	EUR-01	136–174 MHz
IC–F33GS	15.0/30.0 kHz	USA-01	136–174 MHz
	12.5/25.0 kHz	GEN-01	136–174 MHz
IC–F34GS	12.5/20.0/25.0 kHz	EUR-01	136–174 MHz

To upgrade quality, all electrical or mechanical parts and internal circuits are subject to change without notice or obligation.

DANGER

NEVER connect the transceiver to an AC outlet or to a DC power supply that uses more than 8 V. Such a connection could cause a fire or electric hazard.

DO NOT expose the transceiver to rain, snow or any liquids.

DO NOT reverse the polarities of the power supply when connecting the transceiver.

DO NOT apply an RF signal of more than 20 dBm (100 mW) to the antenna connector. This could damage the transceiver's front end.

ORDERING PARTS

Be sure to include the following four points when ordering replacement parts:

1. 10-digit order numbers
2. Component part number and name
3. Equipment model name and unit name
4. Quantity required

<**SAMPLE ORDER**>

5030002760 LCD	FX-2721 LCD	IC-F33GT	Main unit	5 pieces
8810009220 Screw	BO 2x8 ZK	IC-F33GT/GS	Chassis	10 pieces

Addresses are provided on the inside back cover for your convenience.

REPAIR NOTES

1. Make sure a problem is internal before disassembling the transceiver.
2. **DO NOT** open the transceiver until the transceiver is disconnected from its power source.
3. **DO NOT** force any of the variable components. Turn them slowly and smoothly.
4. **DO NOT** short any circuits or electronic parts. An insulated turning tool **MUST** be used for all adjustments.
5. **DO NOT** keep power ON for a long time when the transceiver is defective.
6. **DO NOT** transmit power into a signal generator or a sweep generator.
7. **ALWAYS** connect a 30 dB to 40 dB attenuator between the transceiver and a deviation meter or spectrum analyzer when using such test equipment.
8. **READ** the instructions of test equipment thoroughly before connecting equipment to the transceiver.

Icom, Icom Inc. ICOM and are registered trademarks of Icom Incorporated (Japan) in the United States, the United Kingdom, Germany, France, Spain, Russia and/or other countries.

TABLE OF CONTENTS

SECTION 1 SPECIFICATIONS

SECTION 2 INSIDE VIEWS

SECTION 3 DISASSEMBLY INSTRUCTIONS

SECTION 4 CIRCUIT DESCRIPITON

4-1 RECEIVER CIRCUITS 4-1
4-2 TRANSMITTER CIRCUITS 4-3
4-3 PLL CIRCUITS 4-4
4-4 POWER SUPPLY CIRCUITS 4-4
4-5 OTHER CIRCUITS 4-5
4-6 PORT ALLOCATIONS 4-5

SECTION 5 ADJUSTMENT PROCEDURES

5-1 PREPARATION 5-1
5-2 SOFTWARE ADJUSTMENTS 5-4

SECTION 6 PARTS LIST

SECTION 7 MECHANICAL PARTS AND DISASSEMBLY

SECTION 8 SEMICONDUCTOR INFORMATION

SECTION 9 BOARD LAYOUTS

9-1 MAIN UNIT 9-1
9-2 PA UNIT 9-3
9-3 ANT UNIT 9-3
9-4 FUSE UNIT 9-3

SECTION 10 BLOCK DIAGRAM

SECTION 11 VOLTAGE DIAGRAM

11-1 MAIN UNIT 11-1
11-2 PA/ANT/FUSE UNITS 11-3

SECTION 1 SPECIFICATIONS

■ GENERAL

- Frequency coverage : 136.000–174.000 MHz
- Mode : FM
- Type of emission :

VERSION	WIDE	MIDDLE	NARROW
[USA], [GEN]	16K0F3E (25.0 kHz)	N/A	11K0F3E (12.5 kHz)
[EUR]		14K0F3E (20.0 kHz)	8K50F3E (12.5 kHz)

- Number of conventional channels : 256 ch, 16 banks
- Antenna impedance : 50 Ω (nominal)
- Operating temperature range : –30˚C to +60˚C (–22˚F to +140˚F) [USA], [GEN]
  –25˚C to +55˚C [EUR]
- Power supply requirement : 7.2 V DC nominal (negative ground)
- Current drain (at 7.2 V DC) :

RECEIVING		TRANSMITTING	
Stand-by	Max. audio	High (5 W)	Low (1 W)
85 mA	300 mA	1.5 A	0.7 A

- Dimensions (projections not included) : 53.0(W) × 120.0(H) × 32.5(D) mm; $2^{3}/_{32}$(W) × $4^{23}/_{32}$(H) × $1^{9}/_{32}$(D) in
- Weight (with BP-231+FA-SC55V-1) : 285 g; $10^{1}/_{16}$ oz (Approx.)

■ TRANSMITTER

- Output power (at 7.2 V DC) : High: 5 W, Low: 1 W
- Modulation : Variable reactance frequency modulation
- Maximum permissible deviation : ±5.0 kHz (Wide), ±4.0 kHz (Middle), ±2.5 kHz (Narrow)
- Frequency error : ±2.5 ppm
- Spurious emissions : 80 dB (typical) [USA], [GEN]
  0.25 μW (≤1 GHz), 1.0 μW (≥1 GHz) [EUR]
- Adjacent channel power : 70 dB min (80 dB typical) for Wide and Middle
  60 dB min (70 dB typical) for Narrow
- Audio harmonic distortion : 3% typical (Mod. 1 kHz, 40% deviation)
- Limiting charact of modulator : 60–100% of maximum deviation
- Microphone impedance : 2.2 kΩ

■ RECEIVER

- Receive system : Double conversion superheterodyne system
- Intermediate frequencies : 1st IF: 46.35 MHz, 2nd IF: 450 kHz
- Sensitivity : 0.25 μV (–119 dBm) typical at 12 dB SINAD [USA], [GEN]
  –4 dBμV (–111 dBm) emf typical at 20 dB SINAD [EUR]
- Adjacent channel selectivity : 70 dB min (75 dB typical) for Wide and Middle
  60 dB min (65 dB typical) for Narrow
- Spurious response : 70 dB
- Intermodulation rejection ratio : 70 dB min (74 dB typical) [USA], [GEN]
  65 dB min (67 dB typical) [EUR]
- Audio output power : 0.5 W typical at 5% distortion with an 8 Ω load
- Squelch sensitivity (at threshold) : 0.25 μV typical
- Output impedance (Audio) : 8 Ω

Specifications are measured in accordance with EIA-152-C/204D, TIA-603 or EN 300 086.
All stated specifications are subject to change without notice or obligation.

SECTION 2 INSIDE VIEWS

● MAIN UNIT

TOP VIEW

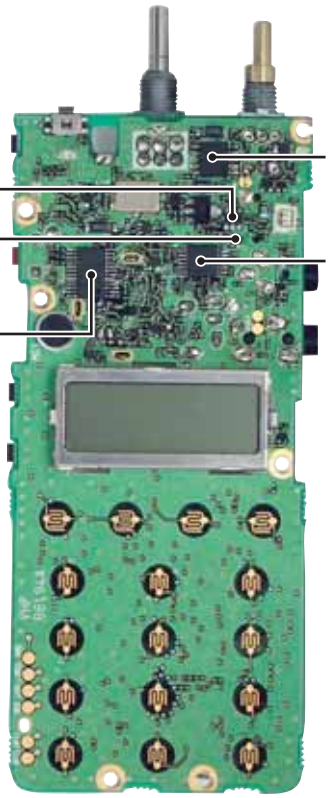

BOTTOM VIEW

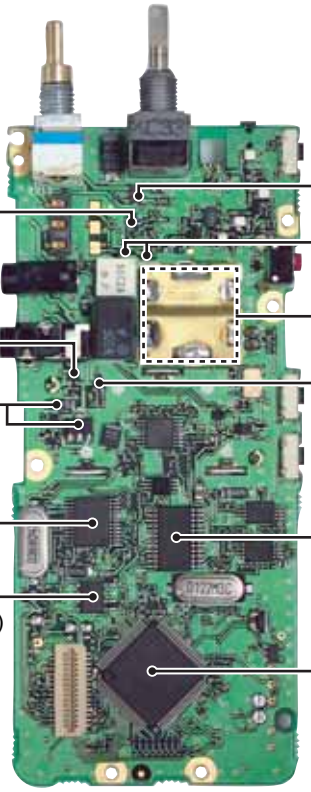

● PA UNIT

TOP VIEW

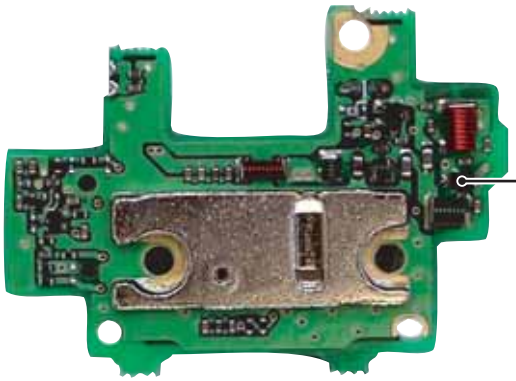

BOTTOM VIEW

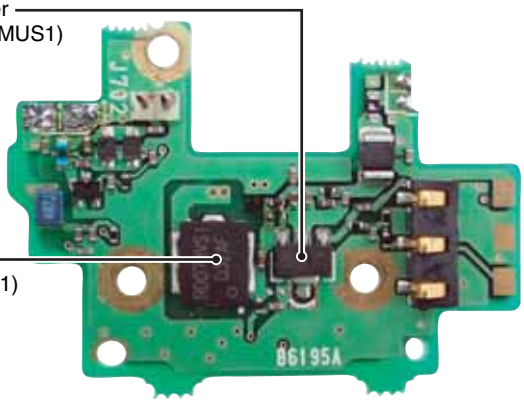

SECTION 3 DISASSEMBLY INSTRUCTIONS

● REMOVING THE CHASSIS UNIT

① Unscrew 1 nut Ⓐ, and remove 2 knobs Ⓑ, Ⓒ.
② Unscrew 2 screws Ⓓ.
③ Unscrew 2 screws Ⓔ.
④ Take off the chassis unit in the direction of the arrow.
⑤ Unplug the connector Ⓕ from the chassis unit.

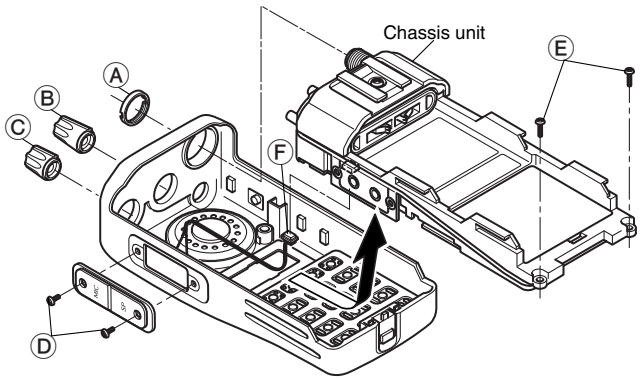

● REMOVING THE PA UNIT

① Unscrew 3 screws Ⓜ.
② Unsolder 4 points Ⓝ, and take off the PA unit in the direction of the arrow.

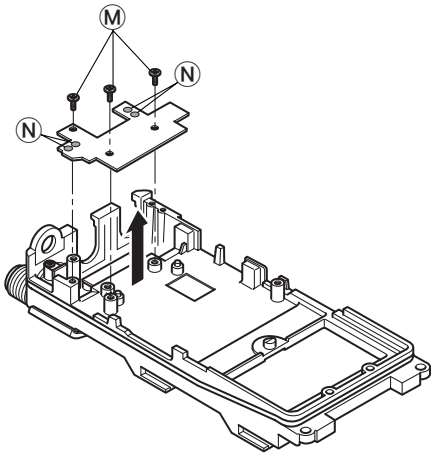

● REMOVING THE MAIN UNIT

① Unscrew 2 nuts Ⓖ, and remove the top plate Ⓗ.
② Remove the side plate Ⓘ.
③ Unscrew 6 screws Ⓙ.
④ Unsolder 8 points Ⓚ, and remove the main shield.
⑤ Unsolder 2 points Ⓛ, and take off the main unit in the direction of the arrow.

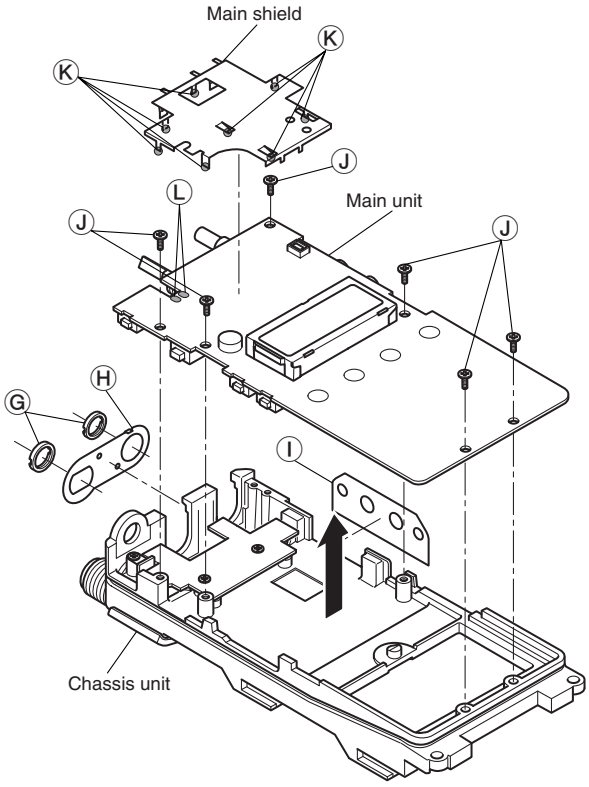

SECTION 4 CIRCUIT DESCRIPTION

4-1 RECEIVER CIRCUITS

4-1-1 ANTENNA SWITCHING CIRCUIT (PA UNIT)

The antenna switching circuit functions as a low-pass filter while receiving and a resonator circuit while transmitting. This circuit does not allow transmit signals to enter the receiver circuits.

Received signals enter the antenna connector (CHASSIS; J1) and pass through the low-pass filter (ANT unit; L801, L802, C803). The filtered signals are passed through the λ/4 type antenna switching circuit (D701, D704, D706) and then applied to the RF circuit.

4-1-2 RF CIRCUIT (MAIN UNIT)

The RF circuit amplifies signals within the range of frequency coverage and filters out-of-band signals.

The signals from the antenna switching circuit pass through the two-stage tunable bandpass filters (D19, D24, L7, L8, C27, C369). The filtered signals are amplified at the RF amplifier (Q5) and then passed through the another two-stage tunable bandpass filters (D14, D15, L11, C39, C45) to suppress unwanted signals. The filtered signals are applied to the 1st mixer circuit.

D14, D15, D19 and D24 employ varactor diodes, that are controlled by the CPU via the D/A converter (IC12), to track the bandpass filter. These varactor diodes tune the center frequency of an RF passband for wide bandwidth receiving and good image response rejection.

4-1-3 1ST MIXER AND 1ST IF CIRCUITS (MAIN UNIT)

The 1st mixer circuit converts the received signal into fixed frequency of the 1st IF signal with the PLL output frequency. By changing the PLL frequency, only the desired frequency passes through a monolithic filter at the next stage of the 1st mixer.

The RF signals from the bandpass filter are mixed with the 1st LO signals, where come from the RX VCO circuit, at the 1st mixer circuit (Q6) to produce a 46.35 MHz 1st IF signal. The 1st IF signal is passed through a monolithic filter (FI1) to suppress out-of-band signals. The filtered signal is applied to the 2nd IF circuit after being amplified at the 1st IF amplifier (Q7).

4-1-4 2ND IF AND DEMODULATOR CIRCUITS (MAIN UNIT)

The 2nd mixer circuit converts the 1st IF signal into a 2nd IF signal. The double-conversion superheterodyne system (which convert receive signals twice) improves the image rejection ratio and obtains stable receiver gain.

The 1st IF signal from the IF amplifier (Q7) is applied to the 2nd mixer section of the FM IF IC (IC9, pin 16), and is mixed with the 2nd LO signal to be converted into a 450 kHz 2nd IF signal.

The FM IF IC (IC9) contains the 2nd mixer, limiter amplifier, quadrature detector, active filter and noise amplifier circuits. A 2nd LO signal (45.9 MHz) is produced at the PLL circuit by tripling it's reference frequency 15.3 MHz).

• 2ND IF DEMODULATOR CIRCUIT

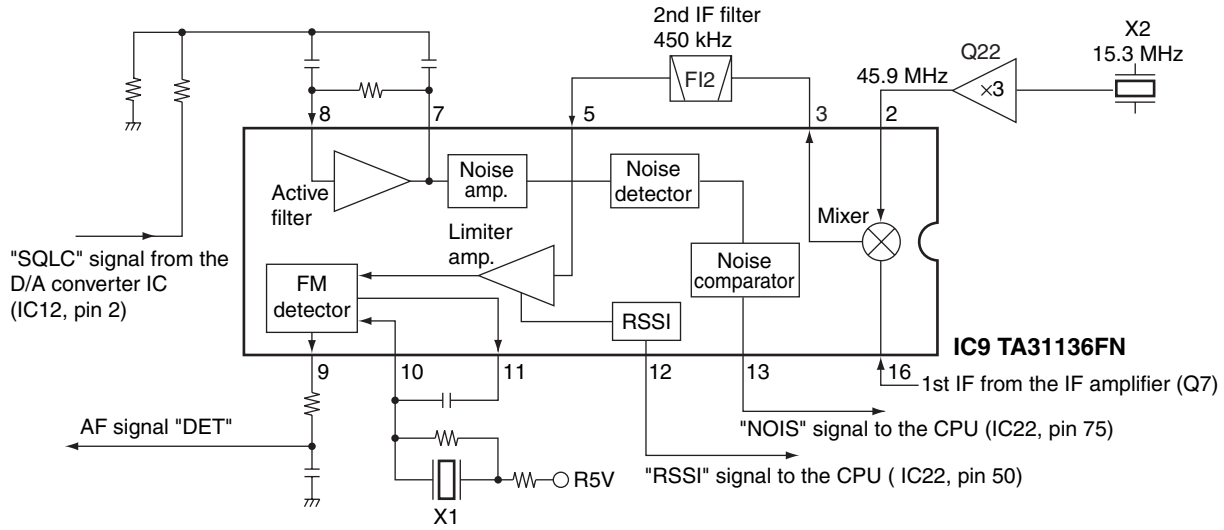

The 2nd IF signal from the 2nd mixer (IC9, pin 3) passes through the ceramic filter (FI2) to remove unwanted heterodyned frequencies. It is then amplified at the limiter amplifier section (IC9, pin 5) and applied to the quadrature detector section (IC9, pins 10, 11) to demodulate the 2nd IF signal into AF signals.

The demodulated AF signals are output from pin 9 (IC9) and applied to the base band IC (IC14).

4-1-5 AF AMPLIFIER CIRCUIT (MAIN UNIT)

The AF amplifier circuit amplifies the demodulated AF signals to drive a speaker. This transceiver employs the base band IC which is composed of pre-amplifier, expander, scrambler, MSK de-modulator, etc. at the AF amplifier section.

The AF signals from the FM IF IC (IC9, pin 9) are amplified at the AF amplifier section in the base band IC (IC14, pin 23), and are then applied to the high-pass filter and low-pass filter section of it.

The filtered signals pass through the high-pass filter to suppress unwanted harmonic components. The signals pass through (or bypass) scrambler and expander sections. The signals are amplified at the amplifier section in the base band IC (IC14).

The output signals from IC14 (pin 20) pass through the low-pass filter sector (IC23, pins 1, 2), and are then applied to the AF amplifier (IC15, pin 8) via the AF volume (R315).

The power amplified AF signals are output from pin 10 and applied to the internal speaker that is connected to J4 via [SP] jack (J2).

4-1-6 SQUELCH CIRCUITS (MAIN UNIT)

• NOISE SQUELCH

A squelch circuit cuts out AF signals when no RF signals are received. By detecting noise components in the AF signals, the squelch circuit switches the AF amplifier controller.

A portion of the AF signals from the FM IF IC (IC9, pin 9) are passed through the D/A converter (IC12, pins 1, 2). The signals are applied to the active filter section in the FM IF IC (IC9, pin 8). The active filter section filters and amplifies noise components. The amplified signals are converted into the pulse-type signals at the noise detector section. The detected signals output from pin 13 (NOIS) via the noise comparator section.

The “NOIS” signal from the FM IF IC is applied to the CPU (IC22, pin 75). Then the CPU analyzes the noise condition and outputs AF mute control signal from pin 84 to control the squelch switch (Q502) as the “MUTE” signal.

• CTCSS AND DTCS

The tone squelch circuit detects tone signals and opens the squelch only when receiving a signal containing a matching subaudible tone (CTCSS or DTCS). When tone squelch is in use, and a signal with a mismatched or no subaudible tone is received, the tone squelch circuit mutes the AF signals even when noise squelch is open.

A portion of the “DET” AF signals from the FM IF IC (IC9, pin 9) pass through the low-pass filter (IC19, pin 5) to remove AF (voice) signals, and are then applied to the amplifier (IC19, pin 3). The amplified signals are applied to the CTCSS or DTCS decoder in the CPU (IC22, pin 46) via the “CDEC” line. The CPU outputs AF mute control signal from pin 84 to control the squelch switch (Q502) as the “MUTE” signal.

• AF AND MIC AMPLIFIER CIRCUIT

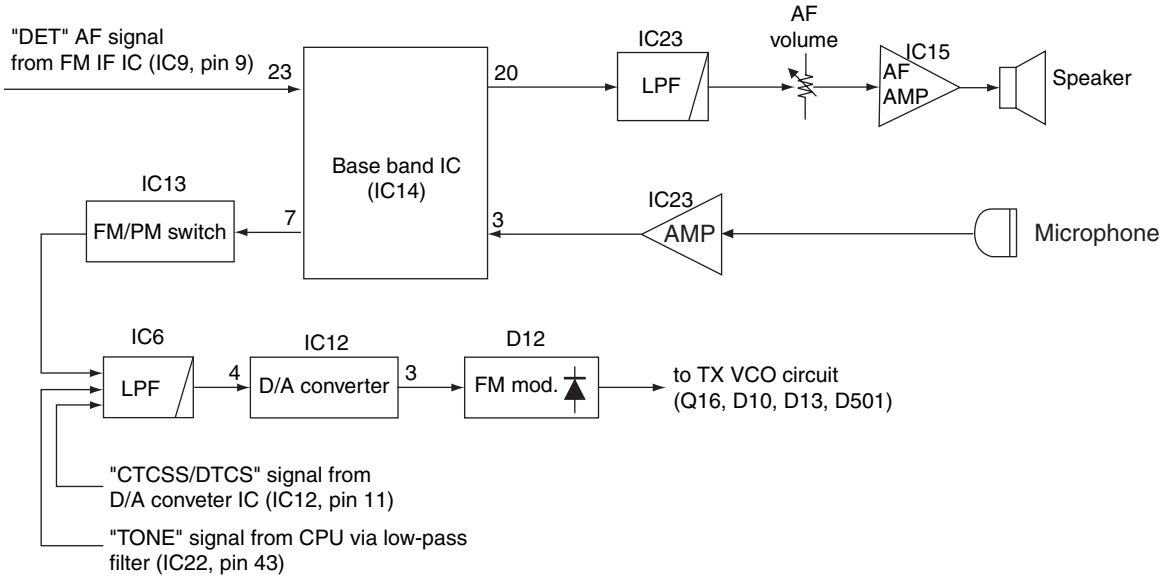

4-2 TRANSMITTER CIRCUITS

4-2-1 MICROPHONE AMPLIFIER CIRCUIT (MAIN UNIT)

The microphone amplifier circuit amplifies audio signals within +6 dB/octave pre-emphasis characteristics from the microphone to a level needed for the modulation circuit.

This transceiver employs the base band IC which is composed of microphone amplifier, compressor, scrambler, limiter, splatter filter, MSK modulator, etc. at the microphone amplifier section.

The AF signals (MIC) from the microphone (MC1) are applied to the amplifier (IC23, pins 6, 7). The amplified signals are amplified again at the microphone amplifier section of the base band IC (IC14, pins 3). The amplified signals are passed through or bypass the compressor, scrambler sections of IC14, and are then passed through the high-pass, limiter amplifier, splatter filter sections of IC14.

The filtered AF signals from the base band IC (pin 6) are applied to the FM/PM switch (IC13, pins 6, 7), and pass through the low-pass filter (IC6, pins 1, 2). The filtered signals are applied to the D/A converter (IC12, pin 4). The output signals from the D/A converter (IC12, pin 3) are applied to the modulation circuit (D12).

4-2-2 MODULATION CIRCUIT (MAIN UNIT)

The modulation circuit modulates the VCO oscillating signal (RF signal) using the microphone audio signals.

The AF signals from the D/A converter (IC12, pin 3) change the reactance of varactor diode (D12) to modulate the oscillated signal at the TX VCO circuit (Q16, D10, D13, D501). The modulated VCO signal is amplified at the buffer amplifiers (Q15, Q29) and is then applied to the drive amplifier circuit via the T/R switch (D16).

The CTCSS/DTCS signals (“CENC0”, “CENC1”, ”CENC2") from the CPU (IC22, pins 13, 15, 16) are combined at the resistors (R222–R224) and are then pass through the low-pass filter (IC6, pins 12, 14). The filtered signals are applied to the D/A converter (IC12, pin 12) via the “TONC” line. The output signals from the D/A converter (IC12, pin 11) are mixed with the filtered Mic audio signals.

The mixed signals are passed through the D/A converter (IC12, pin 3, 4), and are then applied to the D12 in the TX VCO circuit.

4-2-3 DRIVE/POWER AMPLIFIER CIRCUITS (PA UNIT)

The drive/power amplifier circuits amplify the TX VCO oscillating signal to an output power level.

The signal from the TX VCO circuit passes through the T/R switch (MAIN unit; D16), and is amplified at the YGR (Q704), drive (Q702), power (Q701) amplifiers to obtain 5 W of RF power (at 7.2 V DC).

The amplified signal is passed through the low-pass filter (L703, L704, C708, C711, C768), power detector (D702, D703), antenna switching circuit (D701) and another low-pass filters (PA unit; L709, C744, C746, C769 / ANT unit; L801, L802, C802, C803, C807), and is then applied to the antenna connector (CHASSIS unit; J1).

The bias voltage of the drive (Q702) and power (Q701) amplifiers are controlled by the APC circuit.

4-2-4 APC CIRCUIT (PA AND MAIN UNITS)

The APC circuit protects the drive and power amplifiers from a mismatched output load and selects output power of HIGH or LOW.

The power detector circuit (PA unit; D702, D703) detects the transmit power output level and converts it into DC voltage. The output voltage is at a minimum level when the antenna impedance is matched with 50 Ω and is increased when it is mismatched.

The detected voltage is applied to the differential amplifier (MAIN unit; IC2; pin 3), and the “T2” signal from the D/A converter (MAIN unit; IC12, pin 23), controlled by the CPU (MAIN unit; IC22), is applied to the other input for reference. When antenna impedance is mismatched, the detected voltage exceeds the power setting voltage. Then the output voltage of the differential amplifier (MAIN unit; IC2, pin 4) controls the input bias voltage of the drive (PA unit; Q702) and power (PA unit; Q701) amplifiers to reduce the output power.

• APC CIRCUIT

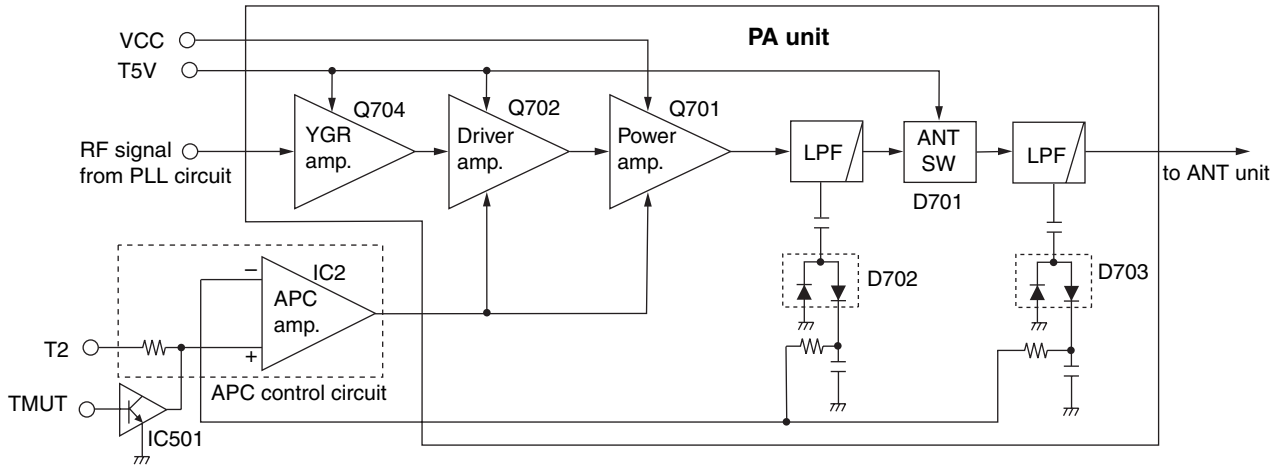

4-3 PLL CIRCUITS

4-3-1 PLL CIRCUIT (MAIN UNIT)

A PLL circuit provides stable oscillation of the transmit frequency and receive 1st LO frequency. The PLL output compares the phase of the divided VCO frequency to the reference frequency. The PLL output frequency is controlled by the divided ratio (N-data) of a programmable divider.

The PLL circuit contains the TX and RX VCO circuits (Q16, Q17, D9–D11, D13, D500, D501). The oscillated signal is amplified at the buffer amplifier (Q15). The output signal frequency is doubled at Q14, and is then applied to the PLL IC (IC21, pin 6) after being passed through the bandpass filter (L32, C205, C507).

Q500, D502 and D503 switch the filtering frequencies between TX and RX which is controlled by R5V.

The PLL IC contains a prescaler, programmable counter, programmable divider and phase detector, etc. The applied signal is divided at the prescaler and programmable counter section by the N-data ratio from the CPU. The divided signal is detected on phase at the phase detector using the reference frequency.

If the oscillated signal drifts, its phase changes from that of the reference frequency, causing a lock voltage change to compensate for the drift in the oscillated frequency.

4-3-2 VCO CIRCUITS (MAIN UNIT)

The VCO circuits contains a separate RX VCO (Q17, D9, D11, D500) and TX VCO (Q16, D10, D13, D501). The oscillated signal is amplified at the buffer amplifiers (Q15, Q29) and is then applied to the T/R switch (D16, D17). Then the receive 1st LO (Rx) signal is applied to the 1st mixer (Q6) and the transmit (Tx) signal to the YGR amplifier circuit (PA unit; Q704).

A portion of the signal from the buffer amplifier (Q15) is fed back to the PLL IC (IC21, pin 6) via the doubler circuit (Q14) as the comparison signal.

4-4 POWER SUPPLY CIRCUIT

4-1-1 MAIN UNIT VOLTAGE

LINE	DESCRIPTION
VCC	The voltage from the connected battery pack.
+5V	Common 5 V converted from the VCC line at the +5 regulator circuit (IC17). The output voltage is supplied to the buffer amplifiers (Q21), PLL IC (IC21) etc.
S5V	Common 5 V converted from the VCC line at the S5 regulator circuit (Q26–Q28). The output voltage is supplied to the ripple filter (Q20), etc.
R5V	Receive 5 V converted from the S5V line at the R5 regulator circuit (Q25). The output voltage is supplied to the tripler (Q22), FM IF IC (IC9), IF amplifier (Q7), 1st mixer (Q6), RF amplifier (Q5), etc.
T5V	Transmit 5 V converted from the S5V line at the T5 regulator circuit (Q24). The output voltage is supplied to the APC amplifier (IC2), PA unit, etc.

• PLL CIRCUIT

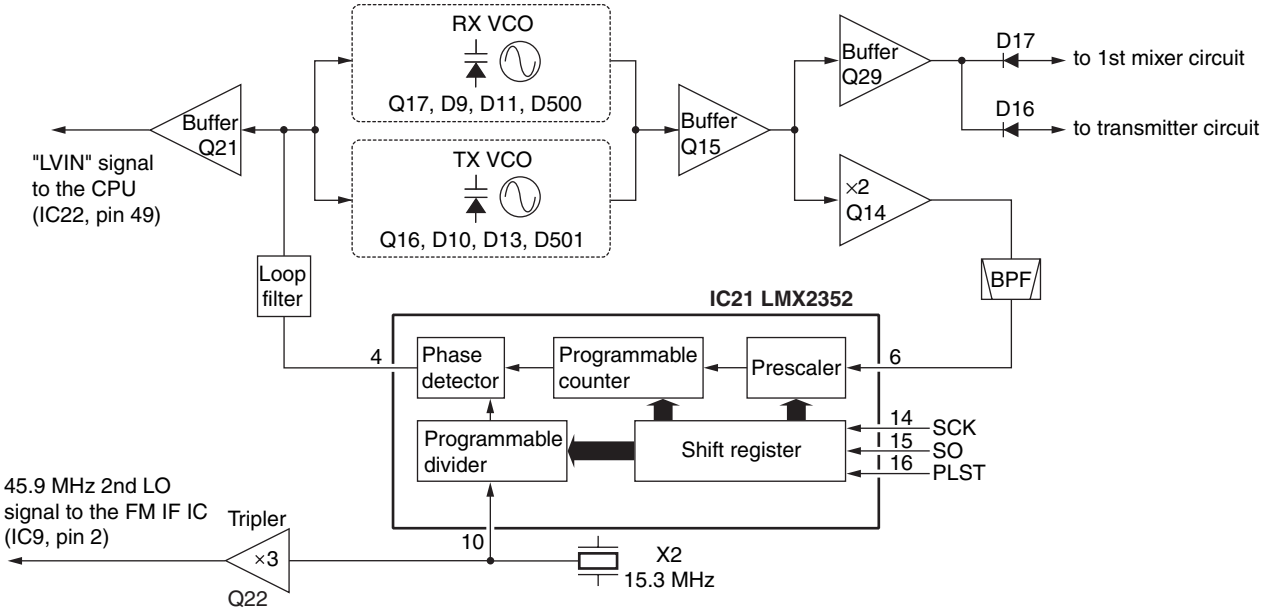

4-5 OTHER CIRCUITS

4-5-1 COMPANDER CIRCUIT (MAIN UNIT)

IC-F33GT/GS/F34GT/GS have compander circuit which can improve S/N ratio and become wide dynamic range. The circuit is composed in the base band IC (IC14).

(1) IN CASE OF TRANSMITTING

The audio signals from the microphone are applied to the base band IC (IC14, pin 3) via microphone amplifier (IC23). The signals are amplified at the amplifier section, and are then applied to the compressor circuit to compress the audio signals. The signals pass through (or bypass) scrambler section, and are then applied to the limiter section after being passed through the high-pass filter. The filtered signals pass through the splatter filter section, and are then applied to the modulation circuit (D12) via the FM/PM switch (IC13), low-pass filter (IC6) and D/A converter (IC12).

(2) IN CASE OF RECEIVING

The demodulated AF signals from the IF IC are applied to the amplifier section in base band IC (IC14, pin 23), and then pass through the low-pass and high-pass filter section to suppress unwanted signals. The filtered signals pass through (or bypass) scrambler section, and are then applied to the expander circuit to expand AF signals. The signals are applied to the base band IC's amplifier section (IC14, pins 19, 20), and are then applied to the AF amplifier circuit.

4-6 PORT ALLOCATIONS

4-6-1 D/A CONVERTOR IC (IC12)

Pin Number	Port name	Description
10	BAL	Outputs the modulation balance level control signal. The signal is applied to the buffer amplifier (IC24, pin 1).
14	TLVA	Outputs the TX VCO lock voltage control signal.
15	RLVA	Outputs the RX VCO lock voltage control signal.
22	T1	Outputs the bandpass filter tuning control signal . The output signal is applied to the bandpass filters (D19, D240).
23	T2	• Outputs the bandpass filter tuning control signal . The output signal is applied to the bandpass filters (D14, D15). • Outputs the TX control signal . The output signal is applied to the APC amplifier (IC2, pin 1).

• BASE BAND IC BLOCK DIAGRAM

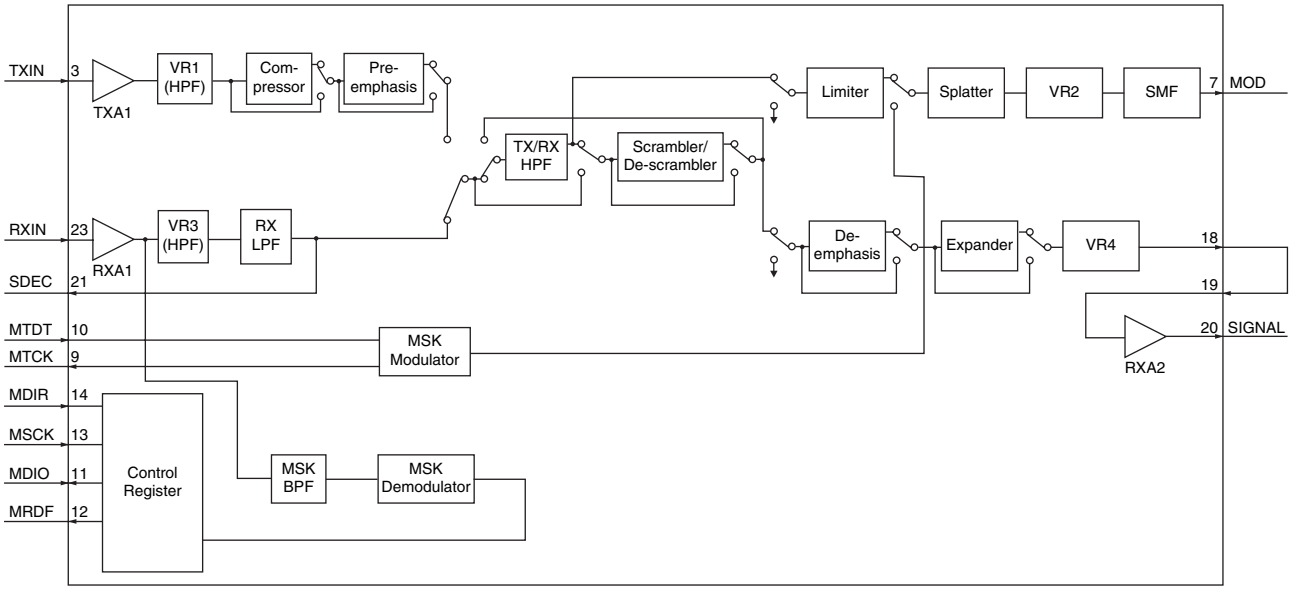

4-6-2 CPU (MAIN unit; IC22)

Pin number	Port name	Description
13, 15, 16	CENC0–CENC2	Output the CTCSS/DTCS signals.
29	REF	Outputs the reference oscillator correcting voltage. The voltage is applied to the buffer amplifier (IC24, pin 3)
30	PLST	Outputs strobe signals to the PLL IC (IC21, pin 16).
34	PMFM	Outputs the FM/PM modulation switching signal to the FM/PM switch (IC13, pin 5).
35	MDIO	I/O port for the serial data signals from/to the base band IC (IC14, pin 11).
36	MSCK	Outputs clock signal for the base band IC (IC14, pin 13).
37	MDIR	Outputs serial data control signal to the base band IC (IC14, pin 14).
38	MTCK	Input port for transmitting MSK clock signal from the base band IC (IC14, pin 9).
39	MTDT	Outputs MSK data for transmitting to the base band IC (IC14, pin 10).
40	MRDF	Input port for the receiving MSK detection signal from the base band IC (IC14, pin 12).
41	DAST	Outputs strobe signals to the D/A convertor (IC12, pin 6).
43	SENC	Output single tone encoder signal.
44	BEEP	Outputs beep audio signals.
45	SDEC	Input port for single tone decode signal from the base band IC (IC14, pin 21).
46	CDEC	Input port for CTCSS/DTCS signal from the amplifier (IC19, pin 1).
48	BATV	Input port for the detect signal for connecting battery pack's voltage.
49	LVIN	Input port for the PLL lock voltage.
50	RSSI	Input port for the S-meter signal from the FM IF IC (IC9, pin 12).
51	TEMP	Input port for the transceiver's internal temperature detecting signal.
69	CSFT	Outputs shift signal for reference oscillator's frequency.
70	AFON	Outputs audio control signal. Low: While outputs audio signals from the speaker.

Pin Number	Port name	Description
74	PTT	Input port for the PTT switch detection signal. Low: While the PTT switch is pushed.
75	NOIS	Input port for the noise signal from the FM IF IC (IC9, pin 13).
76	SO	Outputs serial data to the PLL IC (IC21, pin 15) and D/A convertor (IC12, pin 8).
78	SCK	Outputs serial clock signal to the PLL IC (IC21 pin 14), D/A convertor (IC12, pin 7), etc.
79	CLI	Input port for the cloning data signal.
80	CLO	Outputs the cloning data signal.
82	ESDA	I/O port for data signals from/to the EEPROM (IC10, pin 5).
84	MUTE	Outputs AF control signal . Low: While Squelch ON.
85	ESCL	Outputs clock signal to the EEPROM (IC10, pin 6).
86	S5C	Outputs the S5 regulator (Q26–Q28) control signal. Low: While the S5 regulator outputs 5 V voltage.
87	T5C	Outputs the T5 regulator (Q24) control signal. Low: While transmitting.
88	R5C	Outputs the R5 regulator (Q25) control signal. Low: While receiving.
89	TMUT	Outputs the transmitting mute switch control signal to the mute switch (Q 501). High: While muting.

SECTION 5 ADJUSTMENT PROCEDURES

5-1 PREPARATION

When adjusting IC-F33GT/F33GS/F34GT/F34GS, the optional CS-F33G ADJ ADJUSTMENT SOFTWARE (Rev. 1.0 or later), OPC-478 CLONING CABLE (RS-232C type), OPC-478U CLONING CABLE (USB type) and a JIG CABLE (see illustration at page 5-3) are required.

■ REQUIRED TEST EQUIPMENT

EQUIPMENT	GRADE AND RANGE	EQUIPMENT	GRADE AND RANGE
DC power supply	Output voltage : 7.2 V DC Current capacity : 5 A or more	Audio generator	Frequency range : 300–3000 Hz Measuring range : 1–500 mV
FM deviation meter	Frequency range : DC–800 MHz Measuring range : 0 to ±10 kHz	Attenuator	Power attenuation : 20 or 30 dB Capacity : 10 W
Frequency counter	Frequency range : 0.1–300 MHz Frequency accuracy : ±1 ppm or better Sensitivity : 100 mV or better	Standard signal generator (SSG)	Frequency range : 100–800 MHz Output level : 0.1 µV to 32 mV (–127 to –17 dBm)
Digital multimeter	Input impedance : 10 MΩ/V DC or better	AC millivoltmeter	Measuring range : 10 mV–10 V
RF power meter	Measuring rang : 1–10 W Frequency range : 100–800 MHz Impedance : 50 Ω SWR : Better than 1.2 : 1	Oscilloscope	Frequency rang : DC–20 MHz Measuring range : 0.01–20 V

■ SYSTEM REQUIREMENTS

- Microsoft® Windows® 98/98SE/Me/2000
- RS-232C serial port (D-sub 9 pin)
- USB port

■ ADJUSTMENT SOFTWARE INSTALLATION

① Boot up Windows.
 - Quit all applications when Windows is running.
② Insert the cloning software CD into the appropriate CD drive.
③ Select 'Run' from the [Start] menu.
④ Type the setup program name using the full path name, then push [Enter] key.
 (For example; D:\Setup.exe)
⑤ Follow the prompts.
⑥ Program group 'CS-F33G ADJ' appears in the 'Programs' folder of the [Start] menu.

■ BEFORE STARTING SOFTWARE ADJUSTMENT

Program the adjustment frequencies into the transceiver using with the CS-F33G before starting the software adjustment. Otherwise, the transceiver can not start software adjustment.

CAUTION!: BACK UP the originally programmed memory data in the transceiver before programming the adjustment frequencies.
When program the adjustment frequencies into the transceiver, the transceiver's memory data will be overwritten and lose original memory data at the same time.

Microsoft and Windows are registered trademarks of Microsoft Corporation in the U.S.A. and other countries.

■ STARTING SOFTWARE ADJUSTMENT

① Connect the transceiver and PC with the OPC-478/U and JIG CABLE.
② Turn the transceiver power ON.
③ Boot up Windows, and click the program group 'CS-F33G ADJ' in the 'Programs' folder of the [Start] menu, then CS-F33G ADJ's window appears.
④ Click 'Connect' on the CS-F33G's window, then appears the transceiver's adjustment screen.
⑤ Set or modify adjustment data as desired.

• ADJUSTMENT FREQENCY LIST

CH	FREQUENCY	ADJUSTMENT ITEM
1	155.000 MHz	TX power : High Bandwidth : Wide
2	155.000 MHz	TX power : Low 2 Bandwidth : Wide
3	155.000 MHz	TX power : Low Bandwidth : Wide
4	155.000 MHz	TX power : High Bandwidth : Narrow
5	136.000 MHZ	TX power : High Bandwidth : Wide
6	155.000 MHz	TX power : High CTCSS : 151.4 Hz DTCS : 007 Bandwidth : Wide
7	174.000 MHz	TX power : High Bandwidth : Wide
8	155.000 MHz	TX power : High Bandwidth : Middle

• **CS-F33G ADJ'S SCREEN EXAMPLE**

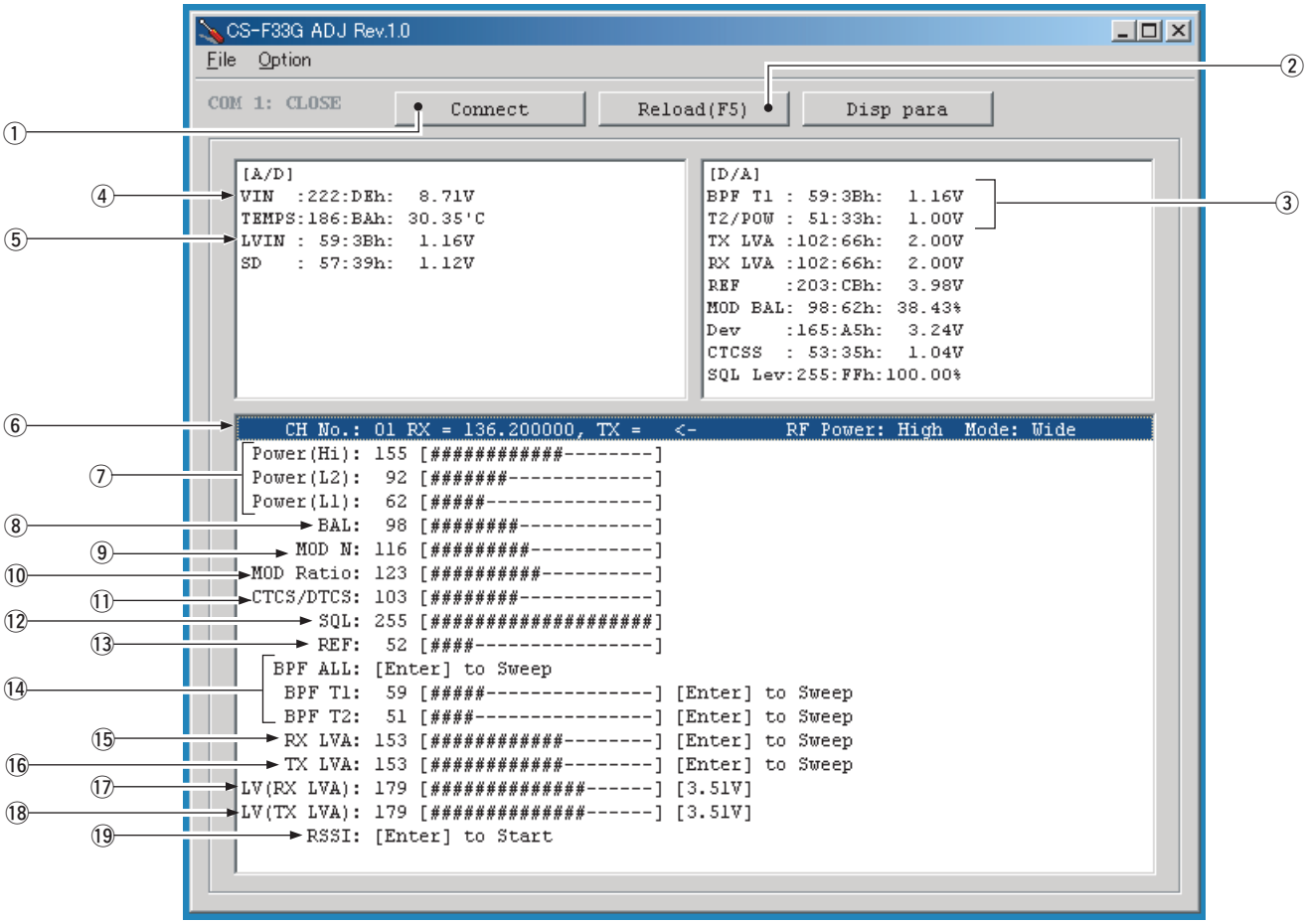

NOTE: The above values for settings are example only.
Each transceiver has its own specific values for each setting.

①: Transceiver's connection state
②: Reload adjustment data
③: Receive sensitivity measurement
④: Connected DC voltage measurement
⑤: PLL lock voltage measurement
⑥: Operating channel select
⑦: RF output power
⑧: FM modulation balance (Narrow)
⑨: FM deviation (Narrow)
⑩: FM deviation (Wide/Middle)
⑪: CTCSS/DTCS deviation
⑫: Squelch level
⑬: Reference frequency
⑭: Receive sensitivity (automatic)
⑮: PLL lock voltage for RX (automatic)
⑯: PLL lock voltage for TX (automatic)
⑰: PLL lock voltage for RX (manual)
⑱: PLL lock voltage for TX (manual)
⑲: S-meter adjustment

• CONNECTION

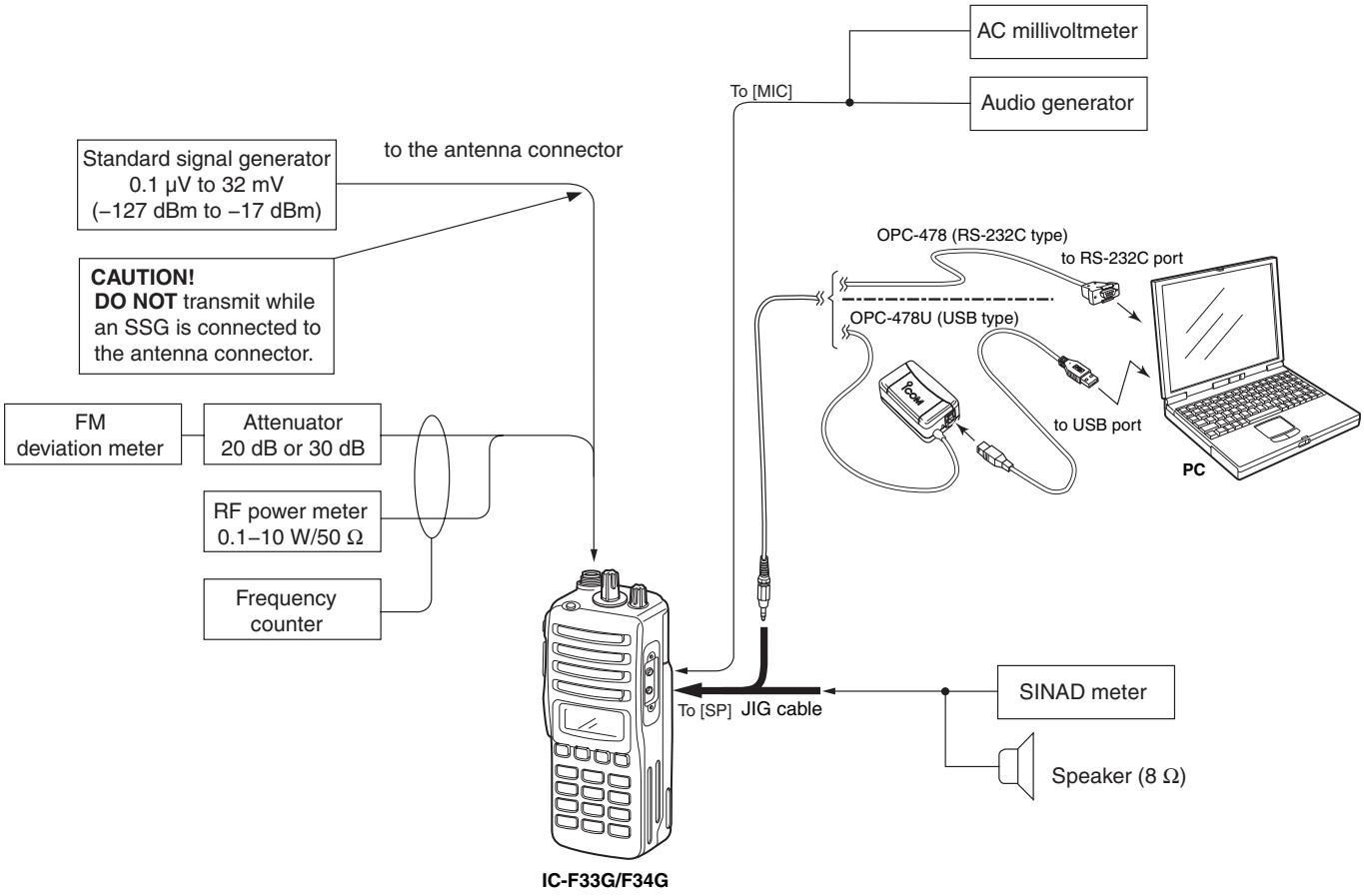

• JIG CABLE

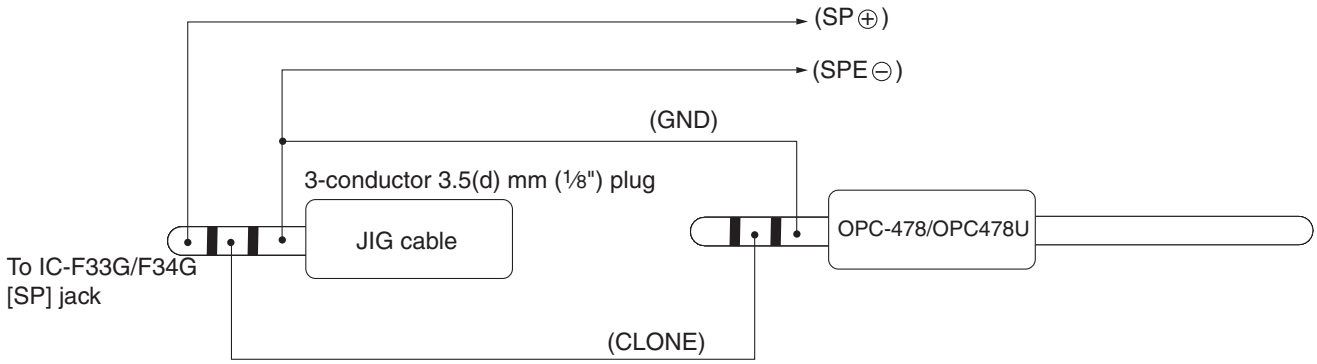

5-2 SOFTWARE ADJUSTMENT (TRANSMITTING)

Select an operation using [↑] / [↓]keys, then set specified value using [←] / [→] keys on the connected computer keyboard

ADJUSTMENT		ADJUSTMENT CONDITION	MEASUREMENT		VALUE
			UNIT	LOCATION	
PLL LOCK VOLTAGE [LV (RX LVA)] [LV (TX LVA)]	1	• Operating Channel : CH7 • Receiving	PC screen	Check the "LVIN" item on the CS-F33G ADJ's screen.	3.5 V
	2	• Operating Channel : CH7 • Transmitting			3.5 V
		CONVENIENT: The PLL lock voltage can be adjustment automatically. Set the cursor to "RX LVA"/"TX LVA" and then push [ENTER] key.			
	3	• Operating Channel : CH5 • Receiving	PC screen	Check the "LVIN" item on the CS-F33G ADJ's screen.	1.0–1.6 V (Verify)
	4	• Operating Channel : CH5 • Transmitting			1.0–1.6 V (Verify)
REFERENCE FREQUENCY [REF]	1	• Operating Channel : CH7 • Connect the RF power meter or 50 Ω dummy load to the antenna connector. • Transmitting	Top panel	Loosely couple the frequency counter to the antenna connector.	174.0000 MHz
OUTPUT POWER [Power (Hi)]	1	• Operating Channel : CH1 • Transmitting	Top panel	Connect the RF power meter to the antenna connector.	5.0 W
[Power (L2)]	2	• Operating Channel : CH2 • Transmitting			2.0 W
[Power (L1)]	3	• Operating Channel : CH3 • Transmitting			1.0 W
MODULATION BALANCE [BAL]	1	• Operating Channel : CH4 • No audio applied to the [MIC] connector. • Set the FM deviation meter as: HPF : OFF LPF : 20 kHz De- emphasis : OFF Detector : (P–P)/2 • Push [P0] while transmitting	Top panel	Connect the FM deviation meter with the oscilloscope to the antenna connector through the attenuator.	Set to square wave form
FM DEVIATION [MOD N] (Narrow)	1	• Operating Channel : CH4 • Set the FM deviation meter as: HPF : OFF LPF : 20 kHz De- emphasis : OFF Detector : (P–P)/2 • Connect the audio generator to the [MIC] connector and set as : 1.0 kHz/150 mVrms • Transmitting	Top panel	Connect the FM deviation meter to the antenna connector through the attenuator.	±2.10 kHz
[MOD Ratio] (Wide)	2	• Operating Channel : CH1 • Transmitting			±4.10 kHz
[MOD Ratio] (Middle) (F34G only)	3	• Operating Channel : CH8 • Transmitting			±3.20 kHz
CTCSS/DTCS DEVIATION [CTCSS/DTCS]	1	• Operating Channel : CH6 • No audio applied to the [MIC] connector. • Transmitting	Top panel	Connect the FM deviation meter to the antenna connector through the attenuator.	±0.70 kHz

SOFTWARE ADJUSTMENT (RECEIVING)

- Select an operation using [↑] / [↓]keys, then set specified value using [←] / [→] keys on the connected computer keyboard
- Need to adjust "S-METER ADJUSTMENT" after "RX SENSITIVITY ADJUSTMENT" is adjusted.
  Otherwise , "S-METER ADJUSTMENT" will not be adjusted properly.

ADJUSTMENT		ADJUSTMENT CONDITION	MEASUREMENT		VALUE
			UNIT	LOCATION	
RX SENSITIVITY [BPF T1] [BPF T2]	1	• Operating Channel : CH5 • Connect the SSG to the antenna connector and set as: Frequency : 136.000 MHz Level : 10 µV* (–87 dBm) Modulation : 1 kHz Deviation : ±3.5 kHz • Receiving	PC screen	Connect the SINAD meter with an 8 Ω load to the [SP] jack through the JIG cable.	Minimum distortion level
		CONVENIENT: The BPF T1, BPF T2 can be adjustment automatically. ①-1: Set the cursor to "BPF ALL" and then push [ENTER] key. ①-2: The connected PC tunes BPF T1, T2 to peak levels. or ②-1: Set the cursor to one of BPF T1, T2 as desired. ②-2: Push [ENTER] key to start tuning. ②-3: Repeat ②-1 and ②-2 to perform additional BPF tuning.			
S-METER [S-METER]	1	• Operating Channel : CH5 • Connect the SSG to the antenna connector and set as: Frequency : 136.000 MHz Level : 14 µV* (–84 dBm) Modulation : 1 kHz Deviation : ±3.5 kHz • Receiving	Push the [ENTER] key on the connected computer's keyboard to set "L2" level.		
	2	• Set the SSG as: Level : 0.45 µV* (–114 dBm) • Receiving	Push the [ENTER] key on the connected computer's keyboard to set "L0" level.		
SQUELCH LEVEL [SQL]	1	• Operating Channel : CH1 • Connect the SSG to the antenna connector and set as: Frequency : 155.000 MHz Level : 0.2 µV* (–121 dBm) Modulation : 1 kHz Deviation : ±3.5 kHz • Receiving	Side panel	Connect speaker to the [SP] jack through the JIG cable.	Set SQL level to close squelch. Then set SQL level at the point where the audio signals just appears.

*The output level of the standard signal generator (SSG) is indicated as the SSG's open circuit.

SECTION 6 PARTS LIST

[MAIN UNIT]

REF NO.	ORDER NO.	DESCRIPTION	M.	H/V LOCATION
IC2	1110002750	S.IC TA75S01F (TE85R)	T	88.1/12.4
IC6	1110005340	S.IC NJM12902V-TE1	B	55.4/23.8
IC8	1110005770	S.IC S-80942CNMC-G9C-T2	B	20.8/41.5
IC9	1110003200	S.IC TA31136FN (EL)	T	81.5/17
IC10	1130011580	S.IC 24LC64T-I/SN	B	29.7/13.2
IC12	1190001350	S.IC M62364FP 600D	B	38.9/26.2
IC13	1130006220	S.IC TC4W53FU (TE12L)	B	47.1/24
IC14	1110006220	S.IC AK2346-E2	B	41.5/13.2
IC15	1110001810	S.IC TA7368F (ER)	T	97.3/15.4
IC17	1110005350	S.IC NJM2870F05-TE1	B	93.2/20.2
IC19	1110005330	S.IC NJM12904V-TE1	B	42.9/39.6
IC20	1130009090	S.IC LC75834W-TLM	T	57.3/20.3
IC21	1130010100	S.IC LMX2352	T	79.5/34.1
IC22	1140011510	S.IC HD64F2238BTF13	B	17.4/22.4
IC23	1110005330	S.IC NJM12904V-TE1	B	36.9/39.3
IC24	1110002750	S.IC TA75S01F (TE85R)	B	56.2/36.9
IC25	1130007020	S.IC TC7S66FU (TE85R)	B	58.2/33
Q2	1590003320	S.FET TPC6103 (TE85L)	T	98.4/4.8
Q3	1590003290	S.TR UNR9213J-(TX)	T	93.4/5
Q4	1560000840	S.FET 2SK1829 (TE85R)	T	90.9/34.7
Q5	1580000730	S.FET 3SK293 (TE85L)	B	90.9/39
Q6	1580000760	S.FET 3SK299-T1 U73	B	86.8/29.5
Q7	1530002600	S.TR 2SC4215-O (TE85R)	B	89.2/19.7
Q14	1530003260	S.TR 2SC5006-T1	B	78.7/34.3
Q15	1530003260	S.TR 2SC5006-T1	B	74.9/28.1
Q16	1530003260	S.TR 2SC5006-T1	B	76.6/25.1
Q17	1530003260	S.TR 2SC5006-T1	B	76.1/33.9
Q18	1590001400	S.TR XP1214 (TX)	T	73.7/27.9
Q19	1590003290	S.TR UNR9213J-(TX)	T	73.9/25.6
Q20	1530002850	S.TR 2SC4116-BL (TE85R)	T	86.5/25.6
Q21	1560000540	S.FET 2SK880-Y (TE85R)	T	70.8/23.8
Q22	1530002850	S.TR 2SC4116-BL (TE85R)	T	81.3/24.3
Q24	1510000920	S.TR 2SA1577 T106 Q	B	63.3/14.3
Q25	1510000920	S.TR 2SA1577 T106 Q	B	64.4/10.4
Q26	1520000450	S.TR 2SB1132 T100 Q	B	56.6/11.3
Q27	1590001190	S.TR XP6501-(TX) .AB	B	57.5/7.3
Q28	1590003230	S.TR UNR9113J-(TX)	B	54.1/7.1
Q29	1530003260	S.TR 2SC5006-T1	B	78.8/23.1
Q38	1590003290	S.TR UNR9213J-(TX)	B	81.8/39.2
Q40	1590003290	S.TR UNR9213J-(TX)	B	49.5/18.4
Q41	1590001190	S.TR XP6501-(TX) .AB	T	90.8/21.3
Q42	1520000450	S.TR 2SB1132 T100 Q	T	89.3/17.2
Q43	1590003400	S.TR UNR9112J	T	77.7/4.9
Q44	1590003270	S.TR UNR9210J-(TX)	B	29.8/5.8
Q45	1590003230	S.TR UNR9113J-(TX)	T	54.6/4.5
Q500	1590003290	S.TR UNR9213J-(TX)	T	78.6/23.7
Q501	1590003290	S.TR UNR9213J-(TX)	T	84.7/11.9
Q502	1560001360	S.FET 2SK3019 TL	B	36/11.7
D5	1160000060	S.DIO DAN202U T106	T	93.6/7.3
D6	1790001260	S.DIO MA2S077-(TX)	B	27.6/31
D8	1790001250	S.DIO MA2S111-(TX)	T	86.7/28.6
D9	1750000770	S.VCP HVC376BTRF	B	69.4/30.5
D10	1750000770	S.VCP HVC376BTRF	B	69.1/26.5
D11	1750000720	S.VCP HVC375BTRF	B	73.3/33.7
D12	1720000470	S.VCP 1SV239 (TPH3)	B	72/28.4
D13	1750000720	S.VCP HVC375BTRF	B	73.5/23.1
D14	1750000710	S.VCP HVC350BTRF	B	86.1/35.4
D15	1750000710	S.VCP HVC350BTRF	B	87.4/39.5
D16	1790001260	S.DIO MA2S077-(TX)	B	84.3/18
D17	1790001260	S.DIO MA2S077-(TX)	B	83.4/22.2
D18	1790001250	S.DIO MA2S111-(TX)	T	92.9/36.6
D19	1750000720	S.VCP HVC375BTRF	B	94.8/39.1
D20	1790001240	S.DIO MA2S728-(TX)	B	94.9/33.4
D21	1160000060	S.DIO DAN202U T106	B	28.4/22.6
D24	1750000720	S.VCP HVC375BTRF	B	96.6/37.7
D25	1790001240	S.DIO MA2S728-(TX)	B	94.9/34.7
D28	1790001670	S.DIO RB706F-40T106	B	29.8/2.9
D500	1750000770	S.VCP HVC376BTRF	B	68.2/32.2
D501	1750000770	S.VCP HVC376BTRF	B	68.1/24.9
D502	1790001260	S.DIO MA2S077-(TX)	B	79.9/28.1
D503	1790001260	S.DIO MA2S077-(TX)	T	80.2/26.7
D504	1750000940	S.DIO ISS400 TE61	B	28.2/24.5
FI1	2030000150	S.MLH FL-335 (46.350 MHz)	T	91.3/27.1
FI2	2020001530	CER CFWLB450KFFA-B0 (GFWM450F)		

M.=Mounted side (T: Mounted on the Top side, B: Mounted on the Bottom side)

[MAIN UNIT]

REF NO.	ORDER NO.	DESCRIPTION	M.	H/V LOCATION
X1	6070000190	S.DCR CDBCB450KCAY24-R0	B	80/16.9
X2	6050011930	S.XTL CR-781 (15.3 MHz)	B	63.3/38.3
X5	6050011730	S.XTL CR-765 (3.6864 MHz)	B	38.3/4
X6	6050011830	S.XTL CR-774 (12.288 MHz)	B	30.9/31.5
L7	6200008090	S.COL LQW2BHN68NJ01L	B	99.2/38.1
L8	6200008090	S.COL LQW2BHN68NJ01L	B	93.1/40.3
L9	6200007750	S.COL LQW2BHN56NJ01L	B	88.7/36.5
L11	6200007750	S.COL LQW2BHN56NJ01L	B	85.9/33.8
L12	6200009350	S.COL ELJRE R22G-F3	B	84.3/26.5
L13	6200007850	S.COL ELJNC R82K-F	B	89.4/32
L21	6200011030	S.COL ELJRF R10JF2 (0.1)	B	80.5/22.8
L22	6200011030	S.COL ELJRF R10JF2 (0.1)	B	77.2/28.5
L24	6200003640	S.COL MLF1608E 100K-T	B	70.3/26.6
L25	6200007760	S.COL LQW2BHN82NJ01L	B	71.9/23.5
L27	6200003550	S.COL MLF1608A 4R7K-T	T	68.7/26.7
L28	6200003550	S.COL MLF1608A 4R7K-T	T	68.8/30.4
L31	6200007000	S.COL ELJRE 82NG-F	B	95.3/31.3
L32	6200007910	S.COL ELJRF 18NJF2 (18)	T	77.8/27.4
L33	6200004480	S.COL MLF1608D R82K-T	T	81.4/22.4
L35	6200003540	S.COL MLF1608D R22K-T	T	84.6/25.5
L37	6200008090	S.COL LQW2BHN68NJ01L	B	71.6/33.4
L41	6200007910	S.COL ELJRF 18NJF2 (18)	B	80.2/33.5
L42	6200003550	S.COL MLF1608A 4R7K-T	T	71.2/34.2
L43	6200003550	S.COL MLF1608A 4R7K-T	T	69.4/21.9
L47	6200007720	S.COL LQW2BHN33NJ01L	B	69.1/34.3
L48	6200008090	S.COL LQW2BHN68NJ01L	B	69.3/22.7
L500	6200003640	S.COL MLF1608E 100K-T	B	70.6/30.4
L501	6200003960	S.COL MLF1608A 1R0K-T	T	74.7/31.9
L502	6200011000	S.COL ELJRF 56NJF2 (56)	B	86.3/25.4
R1	7030005530	S.RES ERJ2GEJ 100 X (10 Ω)	T	87.4/14.6
R4	7030007570	S.RES ERJ2GEJ 122 X (1.2 kΩ)	T	86.3/9.7
R5	7030007340	S.RES ERJ2GEJ 153 X (15 kΩ)	T	86.6/8.1
R6	7030005070	S.RES ERJ2GEJ 683 X (68 kΩ)	T	86/15.7
R7	7030005310	S.RES ERJ2GEJ 124 X (120 kΩ)	T	85.5/13.4
R8	7030005110	S.RES ERJ2GEJ 224 X (220 kΩ)	T	88/10.2
R9	7030004990	S.RES ERJ2GEJ 221 X (220 Ω)	T	90.5/12.3
R12	7030005530	S.RES ERJ2GEJ 100 X (10 Ω)	B	90.2/36.8
R13	7030005090	S.RES ERJ2GEJ 104 X (100 kΩ)	T	95.2/40.2
R15	7030005310	S.RES ERJ2GEJ 124 X (120 kΩ)	T	92.2/39.3
R16	7030008280	S.RES ERJ2GEJ 271 X (270 Ω)	B	89.8/41.2
R17	7030004970	S.RES ERJ2GEJ 470 X (47 Ω)	T	88.7/36.8
R18	7030005040	S.RES ERJ2GEJ 472 X (4.7 kΩ)	T	70.8/30.1
R19	7030005090	S.RES ERJ2GEJ 104 X (100 kΩ)	T	91.1/37.6
R21	7030005090	S.RES ERJ2GEJ 104 X (100 kΩ)	T	87.3/41.4
R22	7030005050	S.RES ERJ2GEJ 103 X (10 kΩ)	T	88.5/38.9
R23	7030005090	S.RES ERJ2GEJ 104 X (100 kΩ)	T	86.5/35.6
R24	7030005120	S.RES ERJ2GEJ 102 X (1 kΩ)	B	86.2/22.8
R25	7030005120	S.RES ERJ2GEJ 102 X (1 kΩ)	B	85.7/31.2
R29	7030007270	S.RES ERJ2GEJ 151 X (150 Ω)	B	89.2/27.5
R31	7030004980	S.RES ERJ2GEJ 101 X (100 Ω)	T	89.2/33.7
R32	7030010040	S.RES ERJ2GE-JPW	T	92.2/31.9
R33	7030007280	S.RES ERJ2GEJ 331 X (330 Ω)	B	90.2/22.9
R34	7030005090	S.RES ERJ2GEJ 104 X (100 kΩ)	B	88.6/21.6
R35	7030004980	S.RES ERJ2GEJ 101 X (100 Ω)	B	87.2/21.2
R36	7030005030	S.RES ERJ2GEJ 152 X (1.5 kΩ)	B	81.9/12.6
R38	7030005090	S.RES ERJ2GEJ 104 X (100 kΩ)	T	81.8/12.2
R39	7030004970	S.RES ERJ2GEJ 470 X (47 Ω)	B	81.4/11.6
R40	7030007270	S.RES ERJ2GEJ 151 X (150 Ω)	T	81.8/21.3
R43	7030004970	S.RES ERJ2GEJ 470 X (47 Ω)	T	77.8/14.1
R44	7030005240	S.RES ERJ2GEJ 473 X (47 kΩ)	T	77.9/21.3
R45	7030008290	S.RES ERJ2GEJ 183 X (18 kΩ)	T	77.2/17.9
R46	7030005000	S.RES ERJ2GEJ 471 X (470 Ω)	T	76.6/20.7
R48	7030005010	S.RES ERJ2GEJ 681 X (680 Ω)	B	87.2/19.9
R50	7030005120	S.RES ERJ2GEJ 102 X (1 kΩ)	B	84.9/22.8
R68	7030005120	S.RES ERJ2GEJ 102 X (1 kΩ)	B	85.6/15.9
R69	7030005050	S.RES ERJ2GEJ 103 X (10 kΩ)	B	85.6/18.2
R70	7030004980	S.RES ERJ2GEJ 101 X (100 Ω)	B	80.1/26.4
R71	7030005070	S.RES ERJ2GEJ 683 X (68 kΩ)	B	80.1/25.5
R72	7030005090	S.RES ERJ2GEJ 104 X (100 kΩ)	B	35.5/34.2
R73	7030008010	S.RES ERJ2GEJ 123 X (12 kΩ)	B	39.1/19.5
R74	7030006610	S.RES ERJ2GEJ 394 X (390 kΩ)	B	40.1/19.5
R75	7030005240	S.RES ERJ2GEJ 473 X (47 kΩ)	B	78.5/31
R76	7030004980	S.RES ERJ2GEJ 101 X (100 Ω)	B	78.7/32
R77	7030004980	S.RES ERJ2GEJ 101 X (100 Ω)	B	77.2/30.9
R78	7030005090	S.RES ERJ2GEJ 104 X (100 kΩ)	B	75.9/29.7
R79	7030008340	S.RES RR0510P-182-D (1.8 kΩ)	B	76.1/32.4
R80	7030005050	S.RES ERJ2GEJ 103 X (10 kΩ)	T	75.1/23.9
R81	7030005090	S.RES ERJ2GEJ 104 X (100 kΩ)	B	47.9/20.8

S.=Surface mount

[MAIN UNIT]

REF NO.	ORDER NO.	DESCRIPTION	M.	H/V LOCATION
R82	7030009320	S.RES ERJ2GEJ 4R7 X (4.7 Ω)	B	74.8/25.7
R83	7030008340	S.RES RR0510P-182-D (1.8 kΩ)	B	75.3/23.9
R84	7030011000	S.RES RR0510P-392-D (3.9 kΩ)	B	74.6/22.7
R85	7030011000	S.RES RR0510P-392-D (3.9 kΩ)	B	73.5/29.7
R86	7030005090	S.RES ERJ2GEJ 104 X (100 kΩ)	T	71.5/25.8
R87	7030005000	S.RES ERJ2GEJ 471 X (470 Ω)	B	75.4/31.2
R88	7030008370	S.RES ERJ2GEJ 561 X (560 Ω)	B	75.1/26.6
R89	7030005050	S.RES ERJ2GEJ 103 X (10 kΩ)	T	70.2/25.6
R90	7030005110	S.RES ERJ2GEJ 224 X (220 kΩ)	T	71.3/21
R91	7030005060	S.RES ERJ2GEJ 333 X (33 kΩ)	T	70.7/19.7
R92	7030005090	S.RES ERJ2GEJ 104 X (100 kΩ)	T	72.5/21.8
R93	7030005060	S.RES ERJ2GEJ 333 X (33 kΩ)	B	46.2/20.4
R94	7030010040	S.RES ERJ2GE-JPW	T	72.3/29.6
R95	7030005030	S.RES ERJ2GEJ 152 X (1.5 kΩ)	T	69.9/30.1
R96	7030005120	S.RES ERJ2GEJ 102 X (1 kΩ)	B	87.2/37.4
R97	7030005120	S.RES ERJ2GEJ 102 X (1 kΩ)	B	11.6/29.9
R98	7030007290	S.RES ERJ2GEJ 222 X (2.2 kΩ)	T	86.4/27.5
R100	7030005050	S.RES ERJ2GEJ 103 X (10 kΩ)	T	72.9/20.5
R101	7030005120	S.RES ERJ2GEJ 102 X (1 kΩ)	T	73.9/23.9
R103	7030007060	S.RES ERJ2GEJ 684X (680 kΩ)	B	56.6/40.1
R104	7030005240	S.RES ERJ2GEJ 473 X (47 kΩ)	B	55/39.1
R106	7030005160	S.RES ERJ2GEJ 105 X (1 MΩ)	B	43.5/7.9
R107	7030005060	S.RES ERJ2GEJ 333 X (33 kΩ)	B	37.5/7.7
R108	7030005000	S.RES ERJ2GEJ 471 X (470 Ω)	B	64/35.4
R110	7030008300	S.RES ERJ2GEJ 184 X (180 kΩ)	T	70.8/17.9
R111	7030005090	S.RES ERJ2GEJ 104 X (100 kΩ)	T	66.1/32.4
R114	7030005080	S.RES ERJ2GEJ 823 X (82 kΩ)	B	38.9/7.3
R115	7030007570	S.RES ERJ2GEJ 122 X (1.2 kΩ)	T	85.8/23.4
R116	7030007060	S.RES ERJ2GEJ 684X (680 kΩ)	T	83.2/26.3
R117	7030005160	S.RES ERJ2GEJ 105 X (1 MΩ)	B	40.6/7.2
R118	7030005110	S.RES ERJ2GEJ 224 X (220 kΩ)	B	26.9/6.3
R119	7030005240	S.RES ERJ2GEJ 473 X (47 kΩ)	B	36.5/7.7
R120	7030005240	S.RES ERJ2GEJ 473 X (47 kΩ)	B	41.6/19.9
R121	7030005110	S.RES ERJ2GEJ 224 X (220 kΩ)	B	36.4/44.6
R122	7030005100	S.RES ERJ2GEJ 154 X (150 kΩ)	B	35/43.1
R123	7030005060	S.RES ERJ2GEJ 333 X (33 kΩ)	B	70.3/41.9
R124	7030005090	S.RES ERJ2GEJ 104 X (100 kΩ)	T	67.3/20.9
R130	7030007300	S.RES ERJ2GEJ 332 X (3.3 kΩ)	T	99.4/35.2
R131	7030005050	S.RES ERJ2GEJ 103 X (10 kΩ)	B	101.3/41.5
R147	7030005090	S.RES ERJ2GEJ 104 X (100 kΩ)	B	55.2/29.8
R148	7030005070	S.RES ERJ2GEJ 683 X (68 kΩ)	B	55.2/30.8
R151	7030005240	S.RES ERJ2GEJ 473 X (47 kΩ)	B	49.8/25.5
R152	7030005700	S.RES ERJ2GEJ 274 X (270 kΩ)	B	52.1/24.4
R154	7030005310	S.RES ERJ2GEJ 124 X (120 kΩ)	B	53.5/28
R156	7030010040	S.RES ERJ2GE-JPW	B	54.7/28.5
R157	7030005050	S.RES ERJ2GEJ 103 X (10 kΩ)	B	53.5/29
R161	7030005050	S.RES ERJ2GEJ 103 X (10 kΩ)	B	61.4/14.4
R162	7030005040	S.RES ERJ2GEJ 472 X (4.7 kΩ)	B	60.1/12.9
R163	7030005050	S.RES ERJ2GEJ 103 X (10 kΩ)	B	62.5/11.4
R164	7030005040	S.RES ERJ2GEJ 472 X (4.7 kΩ)	B	62.1/10.1
R165	7030005050	S.RES ERJ2GEJ 103 X (10 kΩ)	B	55.5/8.2
R166	7030007290	S.RES ERJ2GEJ 222 X (2.2 kΩ)	B	58/5.3
R172	7030005220	S.RES ERJ2GEJ 223 X (22 kΩ)	T	88.7/34.9
R173	7030008400	S.RES ERJ2GEJ 182 X (1.8 kΩ)	T	91.1/36.6
R174	7030005170	S.RES ERJ2GEJ 474 X (470 kΩ)	T	92.9/34.4
R175	7030005110	S.RES ERJ2GEJ 224 X (220 kΩ)	T	92.2/32.9
R181	7030005220	S.RES ERJ2GEJ 223 X (22 kΩ)	B	40/34.9
R182	7030005220	S.RES ERJ2GEJ 223 X (22 kΩ)	B	39.4/41.3
R183	7030005220	S.RES ERJ2GEJ 223 X (22 kΩ)	B	40.4/41.3
R184	7030005090	S.RES ERJ2GEJ 104 X (100 kΩ)	B	43.8/33.3
R185	7030005170	S.RES ERJ2GEJ 474 X (470 kΩ)	B	43.8/35.3
R186	7030005000	S.RES ERJ2GEJ 471 X (470 Ω)	B	45.5/39.7
R203	7030005110	S.RES ERJ2GEJ 224 X (220 kΩ)	B	12.2/5.5
R204	7030005090	S.RES ERJ2GEJ 104 X (100 kΩ)	B	12.3/3.6
R205	7030005090	S.RES ERJ2GEJ 104 X (100 kΩ)	B	28/19.3
R209	7030005240	S.RES ERJ2GEJ 473 X (47 kΩ)	B	51.2/17.8
R210	7030005240	S.RES ERJ2GEJ 473 X (47 kΩ)	B	51.2/19.5
R211	7030005240	S.RES ERJ2GEJ 473 X (47 kΩ)	B	53.6/18.7
R213	7030005040	S.RES ERJ2GEJ 472 X (4.7 kΩ)	B	51.8/20.8
R214	7030005240	S.RES ERJ2GEJ 473 X (47 kΩ)	B	50.2/20.6
R215	7030005070	S.RES ERJ2GEJ 683 X (68 kΩ)	B	59/20.7
R216	7030005070	S.RES ERJ2GEJ 683 X (68 kΩ)	B	59/22.8
R217	7030005070	S.RES ERJ2GEJ 683 X (68 kΩ)	B	58.9/24.8
R218	7030005070	S.RES ERJ2GEJ 683 X (68 kΩ)	B	59/25.9
R219	7030008010	S.RES ERJ2GEJ 123 X (12 kΩ)	B	59/27.8
R220	7030005220	S.RES ERJ2GEJ 223 X (22 kΩ)	B	58.7/29.6
R221	7030005220	S.RES ERJ2GEJ 223 X (22 kΩ)	B	5.7/13.8
R222	7030008300	S.RES ERJ2GEJ 184 X (180 kΩ)	B	7.8/15.6
R223	7030005720	S.RES ERJ2GEJ 563 X (56 kΩ)	B	6.8/15.4
R224	7030005220	S.RES ERJ2GEJ 223 X (22 kΩ)	B	5.8/15.4
R225	7030007260	S.RES ERJ2GEJ 330 X (33 Ω)	T	101.4/18.8
R226	7030005530	S.RES ERJ2GEJ 100 X (10 Ω)	T	94.5/18.8
R227	7030009140	S.RES ERJ2GEJ 272 X (2.7 kΩ)	T	89/20.8
R228	7030007300	S.RES ERJ2GEJ 332 X (3.3 kΩ)	T	88.6/22.3
R229	7030005120	S.RES ERJ2GEJ 102 X (1 kΩ)	T	92.9/22.1
R230	7030007350	S.RES ERJ2GEJ 393 X (39 kΩ)	B	59/26.9
R231	7030007340	S.RES ERJ2GEJ 153 X (15 kΩ)	B	30.4/22.6
R232	7030005090	S.RES ERJ2GEJ 104 X (100 kΩ)	B	58.7/28.7
R233	7030004980	S.RES ERJ2GEJ 101 X (100 Ω)	T	98.4/10.3
R234	7030005530	S.RES ERJ2GEJ 100 X (10 Ω)	T	100.7/12.4

M.=Mounted side (T: Mounted on the Top side, B: Mounted on the Bottom side)

[MAIN UNIT]

REF NO.	ORDER NO.	DESCRIPTION	M.	H/V LOCATION
R235	7030005000	S.RES ERJ2GEJ 471 X (470 Ω)	T	83.5/5
R236	7030005060	S.RES ERJ2GEJ 333 X (33 kΩ)	T	75.7/4.3
R237	7030005530	S.RES ERJ2GEJ 100 X (10 Ω)	B	23.6/14
R238	7030005000	S.RES ERJ2GEJ 471 X (470 Ω)	B	83/8.4
R239	7030007340	S.RES ERJ2GEJ 153 X (15 kΩ)	B	27.9/6.4
R240	7030005210	S.RES ERJ2GEJ 822 X (8.2 kΩ)	B	35.2/32.9
R241	7030005110	S.RES ERJ2GEJ 224 X (220 kΩ)	B	40/31.9
R242	7030005230	S.RES ERJ2GEJ 334 X (330 kΩ)	B	35.2/31.9
R243	7030005040	S.RES ERJ2GEJ 472 X (4.7 kΩ)	B	38.6/32.4
R244	7030005210	S.RES ERJ2GEJ 822 X (8.2 kΩ)	B	40/33.9
R245	7030005070	S.RES ERJ2GEJ 683 X (68 kΩ)	B	40/35.9
R246	7030008290	S.RES ERJ2GEJ 183 X (18 kΩ)	T	98.5/8.1
R247	7030005000	S.RES ERJ2GEJ 471 X (470 Ω)	B	36.6/20.7
R256	7510001730	S.TMR ERTJOEP 473J	B	20/32.9
R257	7030005090	S.RES ERJ2GEJ 104 X (100 kΩ)	B	19/33.9
R258	7030005530	S.RES ERJ2GEJ 100 X (10 Ω)	B	24.9/28
R259	7030005160	S.RES ERJ2GEJ 105 X (1 MΩ)	B	27.7/27.8
R260	7030008010	S.RES ERJ2GEJ 123 X (12 kΩ)	B	27.3/29.3
R261	7030008010	S.RES ERJ2GEJ 123 X (12 kΩ)	B	26/30.5
R262	7030008010	S.RES ERJ2GEJ 123 X (12 kΩ)	B	27.3/34
R263	7030005090	S.RES ERJ2GEJ 104 X (100 kΩ)	B	22.9/32.9
R264	7030006010	S.RES RR0510P-472-D (4.7 kΩ)	B	15.3/33.7
R265	7030006010	S.RES RR0510P-472-D (4.7 kΩ)	B	14.8/32.7
R266	7030005090	S.RES ERJ2GEJ 104 X (100 kΩ)	B	45/18.5
R267	7030005090	S.RES ERJ2GEJ 104 X (100 kΩ)	B	44/18.5
R269	7030005090	S.RES ERJ2GEJ 104 X (100 kΩ)	B	46/18.5
R270	7030007290	S.RES ERJ2GEJ 222 X (2.2 kΩ)	B	19.9/31.9
R272	7030004980	S.RES ERJ2GEJ 101 X (100 Ω)	T	56.3/4.4
R273	7030010040	S.RES ERJ2GE-JPW	B	15.6/5.3
R275	7030005110	S.RES ERJ2GEJ 224 X (220 kΩ)	B	14.4/5
R282	7030005090	S.RES ERJ2GEJ 104 X (100 kΩ)	B	34.4/39.5
R283	7030005090	S.RES ERJ2GEJ 104 X (100 kΩ)	B	34.4/37.9
R288	7030005040	S.RES ERJ2GEJ 472 X (4.7 kΩ)	B	13.5/5
R289	7030005090	S.RES ERJ2GEJ 104 X (100 kΩ)	B	38.4/33.6
R291	7030005120	S.RES ERJ2GEJ 102 X (1 kΩ)	B	9.5/14.7
R292	7030005090	S.RES ERJ2GEJ 104 X (100 kΩ)	B	29.8/18
R293	7030005050	S.RES ERJ2GEJ 103 X (10 kΩ)	B	28.3/18
R295	7030005240	S.RES ERJ2GEJ 473 X (47 kΩ)	T	62.1/14.1
R300	7030005090	S.RES ERJ2GEJ 104 X (100 kΩ)	T	61.7/16.4
R301	7030005070	S.RES ERJ2GEJ 683 X (68 kΩ)	B	47.9/27.4
R302	7030005090	S.RES ERJ2GEJ 104 X (100 kΩ)	T	95.2/39.2
R303	7030005050	S.RES ERJ2GEJ 103 X (10 kΩ)	T	95.1/41.2
R307	7030005580	S.RES ERJ2GEJ 560 X (56 Ω)	T	76.1/28.8
R308	7030005100	S.RES ERJ2GEJ 154 X (150 kΩ)	T	71.8/17.9
R309	7030005050	S.RES ERJ2GEJ 103 X (10 kΩ)	B	7/14.1
R315	7210003061	VAR TP76N00N-15F-A103-2251A		
R318	7030005700	S.RES ERJ2GEJ 274 X (270 kΩ)	T	95.9/3.9
R319	7030005090	S.RES ERJ2GEJ 104 X (100 kΩ)	T	94.3/3.4
R320	7030005090	S.RES ERJ2GEJ 104 X (100 kΩ)	B	93.7/9
R321	7030005090	S.RES ERJ2GEJ 104 X (100 kΩ)	B	14.6/41.6
R323	7030005110	S.RES ERJ2GEJ 224 X (220 kΩ)	B	5.3/26.6
R325	7030005110	S.RES ERJ2GEJ 224 X (220 kΩ)	B	5.3/25.6
R327	7030005110	S.RES ERJ2GEJ 224 X (220 kΩ)	B	5.3/24.6
R329	7030005110	S.RES ERJ2GEJ 224 X (220 kΩ)	B	5.3/23.6
R331	7030005110	S.RES ERJ2GEJ 224 X (220 kΩ)	B	5.3/22.6
R333	7030005110	S.RES ERJ2GEJ 224 X (220 kΩ)	B	5.3/21.6
R335	7030005110	S.RES ERJ2GEJ 224 X (220 kΩ)	B	5.3/20.6
R336	7030005170	S.RES ERJ2GEJ 474 X (470 kΩ)	B	7/26.6
R337	7030005170	S.RES ERJ2GEJ 474 X (470 kΩ)	B	7/25.6
R338	7030005170	S.RES ERJ2GEJ 474 X (470 kΩ)	B	7/24.6
R339	7030005170	S.RES ERJ2GEJ 474 X (470 kΩ)	B	7/23.6
R340	7030005170	S.RES ERJ2GEJ 474 X (470 kΩ)	B	7/22.6
R341	7030005170	S.RES ERJ2GEJ 474 X (470 kΩ)	B	7/21.6
R342	7030005170	S.RES ERJ2GEJ 474 X (470 kΩ)	B	7/20.6
R343	7030005170	S.RES ERJ2GEJ 474 X (470 kΩ)	B	7/19.6
R344	7030005170	S.RES ERJ2GEJ 474 X (470 kΩ)	B	5.3/19.6
R345	7030005120	S.RES ERJ2GEJ 102 X (1 kΩ)	T	81/38.7
R346	7030005120	S.RES ERJ2GEJ 102 X (1 kΩ)	T	82/38.7
R347	7030005120	S.RES ERJ2GEJ 102 X (1 kΩ)	T	83/38.7
R348	7030005120	S.RES ERJ2GEJ 102 X (1 kΩ)	T	84.1/33.2
R349	7030005120	S.RES ERJ2GEJ 102 X (1 kΩ)	B	28/20.4
R350	7030005120	S.RES ERJ2GEJ 102 X (1 kΩ)	B	22.7/15.1
R351	7030005120	S.RES ERJ2GEJ 102 X (1 kΩ)	B	31.4/20.8
R352	7030005120	S.RES ERJ2GEJ 102 X (1 kΩ)	B	8.5/26.9
R353	7030005120	S.RES ERJ2GEJ 102 X (1 kΩ)	B	13.9/13.6
R354	7030005120	S.RES ERJ2GEJ 102 X (1 kΩ)	B	12.7/14
R355	7030005120	S.RES ERJ2GEJ 102 X (1 kΩ)	B	11.4/14.3
R356	7030005120	S.RES ERJ2GEJ 102 X (1 kΩ)	B	11.5/15.4
R357	7030006610	S.RES ERJ2GEJ 394 X (390 kΩ)	B	34.4/41.1
R358	7030006610	S.RES ERJ2GEJ 394 X (390 kΩ)	B	34.4/36.3
R359	7030010040	S.RES ERJ2GE-JPW	T	84/30.6
R362	7030005090	S.RES ERJ2GEJ 104 X (100 kΩ)	B	55.5/33.1
R500	7030005040	S.RES ERJ2GEJ 472 X (4.7 kΩ)	B	78.6/27.3
R501	7030005040	S.RES ERJ2GEJ 472 X (4.7 kΩ)	T	79.1/27
R502	7030005040	S.RES ERJ2GEJ 472 X (4.7 kΩ)	T	76.5/24.4
R506	7030005110	S.RES ERJ2GEJ 224 X (220 kΩ)	B	89/34
R507	7030005120	S.RES ERJ2GEJ 102 X (1 kΩ)	T	76.2/17.9
R508	7030005040	S.RES ERJ2GEJ 472 X (4.7 kΩ)	B	49.3/28.2
R509	7030005040	S.RES ERJ2GEJ 472 X (4.7 kΩ)	B	50.9/28.2
R510	7030005240	S.RES ERJ2GEJ 473 X (47 kΩ)	B	37.8/19.9

S.=Surface mount

[MAIN UNIT]

REF NO.	ORDER NO.	DESCRIPTION	M.	H/V LOCATION
R511	7030005210	S.RES ERJ2GEJ 822 X (8.2 kΩ)	B	36.5/17.8
R512	7030005210	S.RES ERJ2GEJ 822 X (8.2 kΩ)	B	35.2/17.7
R513	7030005240	S.RES ERJ2GEJ 473 X (47 kΩ)	B	34.6/16.5
R514	7030005090	S.RES ERJ2GEJ 104 X (100 kΩ)	B	33.4/38.6
R515	7030005120	S.RES ERJ2GEJ 102 X (1 kΩ)	T	75.7/7
R516	7030005090	S.RES ERJ2GEJ 104 X (100 kΩ)	B	53.6/32.1
R517	7030005230	S.RES ERJ2GEJ 334 X (330 kΩ)	B	31.3/22.6
R518	7030009270	S.RES ERJ2GEJ 821 X (820 Ω)	B	88/41.5
R519	7030005090	S.RES ERJ2GEJ 104 X (100 kΩ)	B	45.2/21.6
R520	7030007350	S.RES ERJ2GEJ 393 X (39 kΩ)	B	5.3/28.6
R521	7030005600	S.RES ERJ2GEJ 273 X (27 kΩ)	B	6.2/27.5
R522	7030005120	S.RES ERJ2GEJ 102 X (1 kΩ)	T	95.5/30.3
R523	7030005120	S.RES ERJ2GEJ 102 X (1 kΩ)	B	36.6/13.6
R524	7030005090	S.RES ERJ2GEJ 104 X (100 kΩ)	B	31.4/7.3
R525	7030005120	S.RES ERJ2GEJ 102 X (1 kΩ)	T	75.2/38.4
R526	7030010040	S.RES ERJ2GE-JPW	T	79.1/29.8
R527	7030005310	S.RES ERJ2GEJ 124 X (120 kΩ)	B	34.1/43.1
C17	4550007120	S.TAN F92 1D 224MPA	T	70.2/27.7
C18	4030017580	S.CER ECJ0EC1H060C	B	95.4/32.4
C19	4030017360	S.CER ECJ0EC1H030B	B	88.9/41.2
C22	4030017550	S.CER ECJ0EC1H1R5B	B	95.3/37.2
C24	4030018860	S.CER ECJ0EB0J105K	T	94.6/42.6
C25	4030017580	S.CER ECJ0EC1H060C	B	96.6/34.6
C26	4030017460	S.CER ECJ0EB1E102K	B	37.6/34.6
C27	4030017430	S.CER ECJ0EC1H101J	B	96.7/39.8
C28	4030017370	S.CER ECJ0EC1H3R5B	B	95.8/39.8
C29	4030017580	S.CER ECJ0EC1H060C	B	93.4/38.2
C30	4030016930	S.CER ECJ0EB1A104K	B	90/34.2
C31	4030017910	S.CER ECJ0EB1H152K	B	41.6/18.7
C32	4030017460	S.CER ECJ0EB1E102K	B	91.6/41.2
C33	4030017420	S.CER ECJ0EC1H470J	B	90.7/41.2
C34	4030017460	S.CER ECJ0EB1E102K	B	47.9/19.8
C35	4030017760	S.CER ECJ0EB1H222K	B	44.3/20.9
C36	4030017460	S.CER ECJ0EB1E102K	T	88.7/37.7
C37	4030017420	S.CER ECJ0EC1H470J	T	88.2/41.4
C39	4030017460	S.CER ECJ0EB1E102K	B	87.1/41.5
C40	4030017550	S.CER ECJ0EC1H1R5B	B	86.3/36.7
C41	4030017640	S.CER ECJ0EC1H150J	B	86.9/31.9
C42	4030017460	S.CER ECJ0EB1E102K	T	89.4/40.2
C43	4030017460	S.CER ECJ0EB1E102K	T	87.3/38.6
C44	4030017570	S.CER ECJ0EC1H040B	B	85.7/32.2
C45	4030017460	S.CER ECJ0EB1E102K	B	84/35.5
C46	4030017420	S.CER ECJ0EC1H470J	B	39.5/18
C47	4030016970	S.CER ECJ0EB1C223K	B	12.4/30.6
C48	4030016790	S.CER ECJ0EB1C103K	B	87.2/27.5
C49	4030017350	S.CER ECJ0EC1H020B	B	86.3/27.4
C50	4030017460	S.CER ECJ0EB1E102K	B	88.2/27.5
C51	4030017460	S.CER ECJ0EB1E102K	T	90.5/31.9
C52	4030017630	S.CER ECJ0EC1H120J	B	89/29.1
C53	4030016790	S.CER ECJ0EB1C103K	B	90.7/29.1
C54	4030017460	S.CER ECJ0EB1E102K	B	90.7/30.1
C55	4030017570	S.CER ECJ0EC1H040B	T	94.6/30.3
C56	4030017390	S.CER ECJ0EC1H180J	T	94.6/25.6
C57	4030017460	S.CER ECJ0EB1E102K	T	88/32.1
C58	4030017460	S.CER ECJ0EB1E102K	B	89.2/22.9
C59	4030017460	S.CER ECJ0EB1E102K	B	86.2/21.2
C60	4030017460	S.CER ECJ0EB1E102K	B	88.2/22.9
C61	4030017430	S.CER ECJ0EC1H101J	B	87.2/18.9
C62	4030017680	S.CER ECJ0EC1H820J	T	80/12.7
C63	4030017460	S.CER ECJ0EB1E102K	B	33.1/20.7
C64	4030017460	S.CER ECJ0EB1E102K	B	34.3/14
C65	4030016930	S.CER ECJ0EB1A104K	B	17.6/32.9
C66	4030017460	S.CER ECJ0EB1E102K	T	77.8/15.1
C67	4030017460	S.CER ECJ0EB1E102K	B	78.1/12.6
C69	4030017750	S.CER ECJ0EB1E122K	T	77.9/19.2
C70	4030017750	S.CER ECJ0EB1E122K	T	77.9/20.2
C71	4030017330	S.CER ECJ0EF1C104Z	T	80/21.2
C73	4030017460	S.CER ECJ0EB1E102K	T	92/13
C74	4030017460	S.CER ECJ0EB1E102K	B	86.6/6
C75	4550007040	S.TAN ECST0JZ106R	B	75.6/12.2
C76	4030016930	S.CER ECJ0EB1A104K	T	90.3/13.7
C77	4030017460	S.CER ECJ0EB1E102K	B	89/16.4
C78	4030017460	S.CER ECJ0EB1E102K	T	85.2/7.4
C79	4030017420	S.CER ECJ0EC1H470J	T	87.9/9
C80	4030016790	S.CER ECJ0EB1C103K	T	85.5/14.4
C90	4030017400	S.CER ECJ0EC1H220J	B	44.7/6.3
C95	4030017710	S.CER ECJ0EC1H181J	B	38.9/8.3
C98	4030017400	S.CER ECJ0EC1H220J	B	32/5.5
C100	4030017620	S.CER ECJ0EC1H100C	B	84.6/20.9
C102	4030017590	S.CER ECJ0EC1H070C	B	78.2/25.1
C103	4030018120	S.CER ECJ0EC1H110J	B	78.1/29.8
C104	4030017460	S.CER ECJ0EB1E102K	B	76.3/28.5
C105	4030017460	S.CER ECJ0EB1E102K	B	78.7/32.9
C107	4030017460	S.CER ECJ0EB1E102K	B	80.1/24.6
C108	4030016790	S.CER ECJ0EB1C103K	B	88/16.4
C109	4030017460	S.CER ECJ0EB1E102K	T	77.3/25.3
C110	4030017730	S.CER ECJ0EB1E471K	T	84.6/27.6
C111	4030017460	S.CER ECJ0EB1E102K	T	75.5/25.6

M.=Mounted side (T: Mounted on the Top side, B: Mounted on the Bottom side)

[MAIN UNIT]

REF NO.	ORDER NO.	DESCRIPTION	M.	H/V LOCATION
C112	4030017750	S.CER ECJ0EB1E122K	B	35.5/7.7
C113	4030017540	S.CER ECJ0EC1HR75B	B	76.3/31.2
C114	4030017660	S.CER ECJ0EC1H330J	B	74.6/32.6
C115	4030017660	S.CER ECJ0EC1H330J	B	74.5/34.2
C116	4030017460	S.CER ECJ0EB1E102K	B	77.5/32.5
C118	4030017530	S.CER ECJ0EC1H0R5B	B	73.4/28
C119	4030017460	S.CER ECJ0EB1E102K	T	76.2/23
C120	4030017730	S.CER ECJ0EB1E471K	B	76.4/22.7
C121	4030017390	S.CER ECJ0EC1H180J	B	74.6/24.8
C122	4030017660	S.CER ECJ0EC1H330J	B	75.5/22.7
C123	4030017510	S.CER ECJ0EC1H680J	B	73.5/26.4
C124	4030017340	S.CER ECJ0EC1H010B	B	71.4/26
C125	4030018110	S.CER ECJ0EB1H272K	B	40.6/8.3
C126	4030017660	S.CER ECJ0EC1H330J	B	73.8/30.9
C128	4030016930	S.CER ECJ0EB1A104K	B	34.2/7.2
C129	4030017340	S.CER ECJ0EC1H010B	B	72.3/26
C130	4030017330	S.CER ECJ0EF1C104Z	B	36.1/9.4
C131	4030017330	S.CER ECJ0EF1C104Z	B	43/19.4
C132	4030016930	S.CER ECJ0EB1A104K	T	71.7/19.7
C133	4030017400	S.CER ECJ0EC1H220J	B	73.4/25.2
C134	4030017390	S.CER ECJ0EC1H180J	B	72.5/30.9
C135	4030017460	S.CER ECJ0EB1E102K	T	73.7/22.4
C136	4030017430	S.CER ECJ0EC1H101J	B	36.4/43.6
C137	4030016790	S.CER ECJ0EB1C103K	T	87/23.2
C139	4030016930	S.CER ECJ0EB1A104K	T	77.3/26.2
C141	4030017460	S.CER ECJ0EB1E102K	T	73.7/21.5
C142	4030016790	S.CER ECJ0EB1C103K	B	68.7/41.9
C143	4030017460	S.CER ECJ0EB1E102K	T	72.4/25.8
C145	4030017730	S.CER ECJ0EB1E471K	T	69.8/20.3
C146	4340000280	S.MLR ECPU 1C 473MA5	T	70.3/32.3
C147	4030017420	S.CER ECJ0EC1H470J	B	68.7/40.9
C148	4550006250	S.TAN TEESVA 1A 106M8L	T	86.5/32.6
C149	4030017460	S.CER ECJ0EB1E102K	T	67.2/7.6
C150	4030018860	S.CER ECJ0EB0J105K	T	69.9/18.2
C151	4030017460	S.CER ECJ0EB1E102K	B	24.4/15.1
C152	4030017420	S.CER ECJ0EC1H470J	T	83.1/40.3
C153	4030017420	S.CER ECJ0EC1H470J	T	82.2/40.3
C154	4030017420	S.CER ECJ0EC1H470J	T	81.2/40.3
C155	4030017460	S.CER ECJ0EB1E102K	T	77.5/29.8
C156	4030017430	S.CER ECJ0EC1H101J	B	64.9/35.4
C157	4030017620	S.CER ECJ0EC1H100C	B	63.1/35.4
C158	4030017330	S.CER ECJ0EF1C104Z	B	61.7/35.3
C159	4030017460	S.CER ECJ0EB1E102K	B	59.4/38
C160	4030017460	S.CER ECJ0EB1E102K	T	69.1/12.4
C161	4030017620	S.CER ECJ0EC1H100C	T	83.3/27.6
C162	4030017500	S.CER ECJ0EC1H560J	T	84/23.3
C163	4030017570	S.CER ECJ0EC1H040B	T	84.9/23.3
C164	4030017590	S.CER ECJ0EC1H070C	T	83.1/23.3
C165	4030016790	S.CER ECJ0EB1C103K	T	83.1/25
C166	4030017360	S.CER ECJ0EC1H030B	T	83.1/21.7
C167	4030017330	S.CER ECJ0EF1C104Z	B	83.1/11.6
C168	4030017460	S.CER ECJ0EB1E102K	T	75/8.5
C169	4030017420	S.CER ECJ0EC1H470J	T	68.8/7
C170	4030017330	S.CER ECJ0EF1C104Z	B	51.1/26
C171	4030017460	S.CER ECJ0EB1E102K	B	70.3/40.9
C172	4030016950	S.CER ECJ0EB1A473K	B	52.1/26
C174	4030017710	S.CER ECJ0EC1H181J	B	52.2/27.8
C175	4030017420	S.CER ECJ0EC1H470J	B	71.8/41.4
C176	4030016930	S.CER ECJ0EB1A104K	T	99.4/36.2
C177	4030016930	S.CER ECJ0EB1A104K	B	100.3/41.5
C180	4030017330	S.CER ECJ0EF1C104Z	B	55.2/31.9
C182	4030017460	S.CER ECJ0EB1E102K	B	87.2/22.9
C183	4030017620	S.CER ECJ0EC1H100C	B	84.9/23.8
C184	4030017460	S.CER ECJ0EB1E102K	T	91.3/38.9
C185	4030017420	S.CER ECJ0EC1H470J	T	90.4/38.9
C186	4030016930	S.CER ECJ0EB1A104K	T	88.7/35.8
C188	4030017460	S.CER ECJ0EB1E102K	T	82.7/12.2
C191	4030017420	S.CER ECJ0EC1H470J	B	70.1/32.5
C192	4030017440	S.CER ECJ0EC1H221J	B	70.1/24.5
C205	4030017350	S.CER ECJ0EC1H020B	B	80.2/30.6
C206	4030017580	S.CER ECJ0EC1H060C	B	80.2/29.7
C207	4030017460	S.CER ECJ0EB1E102K	B	80/32.2
C208	4030017380	S.CER ECJ0EC1H050B	B	79/29.8
C209	4030017460	S.CER ECJ0EB1E102K	T	75.7/27.6
C211	4030017260	S.CER C2012 JB 0J 475KT	B	46/29.9
C221	4030016940	S.CER ECJ0EB1A393K	B	39.4/39.7
C222	4030016790	S.CER ECJ0EB1C103K	B	40.4/42.9
C223	4030017330	S.CER ECJ0EF1C104Z	B	40.4/39.7
C224	4550005980	S.TAN TEESVA 1A 475M8L	B	46/35.8
C225	4030017730	S.CER ECJ0EB1E471K	B	43.8/34.3
C226	4030017460	S.CER ECJ0EB1E102K	B	46.5/39.7
C231	4030016790	S.CER ECJ0EB1C103K	B	60.1/13.9
C232	4030016790	S.CER ECJ0EB1C103K	B	62.1/9.1
C233	4550007090	S.TAN TEESVA 1A 226M8R	B	60/8.1
C234	4030018860	S.CER ECJ0EB0J105K	B	55.7/5.2
C235	4030016790	S.CER ECJ0EB1C103K	B	54.7/5.2
C236	4030018560	S.CER C2012 JB 1A 475K-T	B	94/23.8
C237	4030016790	S.CER ECJ0EB1C103K	B	92.9/17.9
C238	4550007070	S.TAN TEESVP 1A 475M8R	B	92/24.6
C239	4030017330	S.CER ECJ0EF1C104Z	B	92.9/16.9

S.=Surface mount

[MAIN UNIT]

REF NO.	ORDER NO.	DESCRIPTION	M.	H/V LOCATION
C240	4030017460	S.CER ECJ0EB1E102K	B	56.8/29.8
C241	4030017460	S.CER ECJ0EB1E102K	B	60.1/14.9
C242	4030017460	S.CER ECJ0EB1E102K	B	64.8/8.4
C302	4030016790	S.CER ECJ0EB1C103K	T	71.7/31
C303	4030017460	S.CER ECJ0EB1E102K	T	74.8/34
C308	4550007090	S.TAN TEESVA 1A 226M8R	B	33.8/10.5
C309	4030017490	S.CER C1608 JB 1A 105K-T	B	35.8/15.4
C310	4030017490	S.CER C1608 JB 1A 105K-T	B	33.3/15.1
C312	4030016780	S.CER ECJ0EB1C153K	B	52.3/17.8
C314	4030017740	S.CER ECJ0EB1E821K	B	55.2/18.7
C315	4030017330	S.CER ECJ0EF1C104Z	B	49.2/20.6
C316	4030017420	S.CER ECJ0EC1H470J	B	57.4/19.1
C317	4030017770	S.CER ECJ0EB1E332K	B	59/21.7
C318	4030017690	S.CER ECJ0EC1H121J	B	57.3/28.5
C319	4030017760	S.CER ECJ0EB1H222K	B	58.9/23.8
C320	4030017460	S.CER ECJ0EB1E102K	B	60.6/26.9
C321	4030017460	S.CER ECJ0EB1E102K	T	91.1/3.1
C322	4030017420	S.CER ECJ0EC1H470J	T	100.1/18.6
C323	4030016950	S.CER ECJ0EB1A473K	T	94.5/20.4
C324	4550007110	S.TAN SY6-1A107M-RC	B	99.4/16.5
C325	4550006250	S.TAN TEESVA 1A 106M8L	T	101.4/15.8
C326	4550007080	S.TAN TEESVA 1C 106M8R	T	92.9/16.9
C327	4030017330	S.CER ECJ0EF1C104Z	T	93.8/13.6
C328	4030017460	S.CER ECJ0EB1E102K	T	87.7/20.3
C329	4030017460	S.CER ECJ0EB1E102K	T	87.7/21.3
C330	4030017330	S.CER ECJ0EF1C104Z	T	92.9/21.1
C331	4030017460	S.CER ECJ0EB1E102K	T	101.7/12.4
C332	4030017460	S.CER ECJ0EB1E102K	T	82.9/3.7
C333	4550007040	S.TAN ECST0JZ106R	T	81.5/4
C334	4030017330	S.CER ECJ0EF1C104Z	T	75.7/5.4
C335	4030018870	S.CER ECJ0EF0J105Z	B	40/32.9
C336	4030017730	S.CER ECJ0EB1E471K	B	40/36.9
C337	4030017490	S.CER C1608 JB 1A 105K-T	T	96.4/7.9
C338	4030017330	S.CER ECJ0EF1C104Z	B	34.5/20.7
C339	4030016790	S.CER ECJ0EB1C103K	B	32.6/18
C340	4030017330	S.CER ECJ0EF1C104Z	B	9.6/16.5
C345	4030017330	S.CER ECJ0EF1C104Z	B	19/34.9
C346	4030017600	S.CER ECJ0EC1H080C	B	27.5/26.4
C347	4030017640	S.CER ECJ0EC1H150J	B	27.4/36
C348	4030017400	S.CER ECJ0EC1H220J	B	26.6/28
C349	4030017330	S.CER ECJ0EF1C104Z	B	26/31.5
C350	4030017330	S.CER ECJ0EF1C104Z	B	27.3/33
C351	4030017330	S.CER ECJ0EF1C104Z	B	27.4/35
C352	4030017030	S.CER ECJ0EB1A273K	B	23.8/41.5
C353	4030016930	S.CER ECJ0EB1A104K	B	14/32
C354	4030016790	S.CER ECJ0EB1C103K	B	30.8/18
C355	4030017460	S.CER ECJ0EB1E102K	B	51.5/7.6
C356	4030017330	S.CER ECJ0EF1C104Z	B	15.4/4
C357	4030018560	S.CER C2012 JB 1A 475K-T	B	25.9/38.4
C359	4030017330	S.CER ECJ0EF1C104Z	B	21.6/38.3
C360	4030017330	S.CER ECJ0EF1C104Z	B	49.8/26.5
C368	4030017460	S.CER ECJ0EB1E102K	T	94.8/38
C369	4030017430	S.CER ECJ0EC1H101J	B	94.6/41.3
C371	4030017330	S.CER ECJ0EF1C104Z	B	45.9/32.5
C375	4030017460	S.CER ECJ0EB1E102K	T	86/18
C376	4030017460	S.CER ECJ0EB1E102K	T	86/17
C377	4030017460	S.CER ECJ0EB1E102K	B	30.4/8.7
C378	4030017460	S.CER ECJ0EB1E102K	B	37.9/44.2
C379	4030017460	S.CER ECJ0EB1E102K	T	84.1/3.7
C380	4030017330	S.CER ECJ0EF1C104Z	B	36.8/33.6
C384	4030018100	S.CER ECJ0EB1H681K	T	61.7/15.4
C386	4030017330	S.CER ECJ0EF1C104Z	T	58.6/13.3
C387	4030017330	S.CER ECJ0EF1C104Z	T	59.8/13.3
C388	4030017330	S.CER ECJ0EF1C104Z	T	60.9/14.1
C390	4030017420	S.CER ECJ0EC1H470J	T	80.7/29.8
C393	4030017330	S.CER ECJ0EF1C104Z	T	77.8/16.1
C394	4030017330	S.CER ECJ0EF1C104Z	T	78.2/17.4
C398	4030016930	S.CER ECJ0EB1A104K	T	67/32.4
C399	4550007120	S.TAN F92 1D 224MPA	T	67.4/34.1
C400	4030016930	S.CER ECJ0EB1A104K	T	67.3/22.7
C401	4030018860	S.CER ECJ0EB0J105K	T	67.3/23.6
C402	4030017460	S.CER ECJ0EB1E102K	T	92.9/19.9
C404	4030016790	S.CER ECJ0EB1C103K	B	59.1/35.3
C405	4030017460	S.CER ECJ0EB1E102K	B	39.4/42.9
C406	4030016930	S.CER ECJ0EB1A104K	B	52.3/19.5
C407	4030017460	S.CER ECJ0EB1E102K	T	95.9/2.9
C408	4030017460	S.CER ECJ0EB1E102K	T	100.9/4.2
C409	4030017460	S.CER ECJ0EB1E102K	B	16.6/32.9
C411	4030016930	S.CER ECJ0EB1A104K	B	18.6/32.4
C412	4030017420	S.CER ECJ0EC1H470J	T	78.4/3.1
C413	4030018110	S.CER ECJ0EB1H272K	T	74.8/17.1
C414	4030018870	S.CER ECJ0EF0J105Z	B	34.5/34.2
C500	4030017610	S.CER ECJ0EC1H090C	B	68.3/30.1
C503	4030017610	S.CER ECJ0EC1H090C	B	68.8/28.2
C504	4030017360	S.CER ECJ0EC1H030B	B	68/27
C505	4030017360	S.CER ECJ0EC1H030B	B	69.2/24.5
C506	4030017580	S.CER ECJ0EC1H060C	T	79.9/28.3
C507	4030017350	S.CER ECJ0EC1H020B	T	76.9/27.4
C508	4030017380	S.CER ECJ0EC1H050B	T	77.7/28.6
C509	4030016930	S.CER ECJ0EB1A104K	B	92/33.2

M.=Mounted side (T: Mounted on the Top side, B: Mounted on the Bottom side)

[MAIN UNIT]

REF NO.	ORDER NO.	DESCRIPTION	M.	H/V LOCATION
C510	4550007040	S.TAN ECST0JZ106R	T	89.1/7.6
C511	4030016790	S.CER ECJ0EB1C103K	B	88.8/38.8
C512	4030016930	S.CER ECJ0EB1A104K	T	73.9/34
C515	4030017660	S.CER ECJ0EC1H330J	B	56.6/41
J2	6450002250	CNR HSJ1456-010320		
J3	6450001680	CNR HSJ1122-010010		
J4	6510021900	S.CNR BM02B-ASRS-TF	T	88.1/4.5
J5	6510018430	S.CNR AXN330C038P	B	15.2/9.8
J6	6510024390	S.CNR IMSA-6176S-03Y900	B	88.2/8.8
DS1	5010000160	S.LED LNJ310M6URA	T	57.3/6
DS2	5010000160	S.LED LNJ310M6URA	T	57.3/39.4
DS3	5030002760	LCD L3-0200HAY-3		
MC1	7700002480	MIC SKB-2746 LPC		
S1	2230001060	S.SW EVQ-PUL 02K	T	102.2/38.1
S2	2260002840	SW SKHLLFA010		
S3	2260002800	S.SW SW-167 (SKQTLAE010)	B	61.1/44.2
S4	2260002800	S.SW SW-167 (SKQTLAE010)	B	51.6/44.2
S5	2260002800	S.SW SW-167 (SKQTLAE010)	B	99.6/44.2
S27	2250000180	ECR EC10SP16-47		
EP3	6910015370	S.BEA ACZ1005Y-102-T	B	59.4/36.9
EP4	6910015370	S.BEA ACZ1005Y-102-T	B	37.4/19
EP5	6910015370	S.BEA ACZ1005Y-102-T	B	31.9/8.5
EP7	8930063020	LCT SRCN-2721-SP-N-W		
EP10	0910058442	PCB B 6194B		
EP11	6910015370	S.BEA ACZ1005Y-102-T	T	78/11.7

S.=Surface mount

[PA UNIT]

REF NO.	ORDER NO.	DESCRIPTION	M.	H/V LOCATION
Q701	1560001230	S.FET RD07MVS1	B	22.6/8.3
Q702	1560001240	S.FET RD01MUS1	B	16/8.3
Q704	1530003260	S.TR 2SC5006-T1	T	3.8/10.3
D701	1750000580	S.DIO 1SV307 (TPH3)	T	33.9/12.8
D702	1790001670	S.DIO RB706F-40T106	T	28.8/17.8
D703	1790001670	S.DIO RB706F-40T106	B	31.7/13.5
D704	1750000580	S.DIO 1SV307 (TPH3)	B	28.4/16.6
D705	1790001240	S.DIO MA2S728-(TX)	T	25.9/18.1
D706	1750000580	S.DIO 1SV307 (TPH3)	B	30.1/16.6
L701	6200002860	S.COL NL 252018T-4R7J	B	34.4/12.4
L702	6200007910	S.COL ELJRF 18NJF2 (18)	B	18/12.6
L703	6200008490	S.COL 0.30-0.9-3TR 7.5N	T	28/13.7
L704	6200008510	S.COL 0.30-0.9-4TR 10.5N	T	24.2/14
L705	6200009760	S.COL 0.30-0.9-9TR	T	19.2/13.7
L706	6200003590	S.COL EXCCL3225U1	B	10.7/15.9
L707	6200010990	S.COL ELJRF 47NJF2 (47)	T	2.3/11.7
L708	6200008280	S.COL 0.30-1.7-7TL 50N	T	32.8/10.5
L709	6200008170	S.COL 0.35-1.6-8TL 54N	T	33.5/16.8
L712	6200009290	S.COL LQW18AN47NG00D	B	33.2/16.3
R701	7030007270	S.RES ERJ2GEJ 151 X (150 Ω)	B	29.7/10.4
R703	7030005040	S.RES ERJ2GEJ 472 X (4.7 kΩ)	T	25.4/16.7
R704	7030007250	S.RES ERJ2GEJ 220 X (22 Ω)	B	19.3/5.2
R705	7030005090	S.RES ERJ2GEJ 104 X (100 kΩ)	T	19.1/2.3
R706	7030005040	S.RES ERJ2GEJ 472 X (4.7 kΩ)	T	18.1/2.3
R708	7030005590	S.RES ERJ2GEJ 680 X (68 Ω)	B	12.2/11
R709	7030005220	S.RES ERJ2GEJ 223 X (22 kΩ)	B	9.9/11.5
R710	7030005040	S.RES ERJ2GEJ 472 X (4.7 kΩ)	B	9.9/9.9
R715	7030005000	S.RES ERJ2GEJ 471 X (470 Ω)	T	4.9/7.7
R726	7030005040	S.RES ERJ2GEJ 472 X (4.7 kΩ)	B	28.9/14.2
R730	7030007290	S.RES ERJ2GEJ 222 X (2.2 kΩ)	T	3.3/8.7
R732	7030004980	S.RES ERJ2GEJ 101 X (100 Ω)	T	5.8/10.7
R733	7030010040	S.RES ERJ2GE-JPW	T	3.2/5.7
R734	7030010040	S.RES ERJ2GE-JPW	T	4.2/14.2
R735	7030010040	S.RES ERJ2GE-JPW	T	6.4/14.6
R736	7030010040	S.RES ERJ2GE-JPW	B	14.2/13.5
R737	7030004990	S.RES ERJ2GEJ 221 X (220 Ω)	T	3.2/6.7
R738	7030004980	S.RES ERJ2GEJ 101 X (100 Ω)	B	18/11.6
C701	4030017460	S.CER ECJ0EB1E102K	T	35/11
C702	4030017430	S.CER ECJ0EC1H101J	B	31.3/10.5
C703	4030017420	S.CER ECJ0EC1H470J	B	32.3/10.5
C704	4030017390	S.CER ECJ0EC1H180J	B	31.8/9.2
C705	4030007040	S.CER C1608 CH 1H 180J-T	T	31.3/14.5
C706	4030007050	S.CER C1608 CH 1H 220J-T	T	29.7/14
C707	4030017460	S.CER ECJ0EB1E102K	T	26.9/16.6
C708	4030017510	S.CER ECJ0EC1H680J	T	27.9/15.2
C711	4030007100	S.CER C1608 CH 1H 560J-T	T	26.2/14
C715	4030017420	S.CER ECJ0EC1H470J	T	15.7/13.5
C716	4030016790	S.CER ECJ0EB1C103K	T	14.7/13.5
C718	4030017460	S.CER ECJ0EB1E102K	B	18/5.1
C719	4030017460	S.CER ECJ0EB1E102K	T	13.7/13.5
C720	4030017680	S.CER ECJ0EC1H820J	B	19/8.4
C722	4030017460	S.CER ECJ0EB1E102K	B	12.9/12.9
C723	4030017460	S.CER ECJ0EB1E102K	B	10.9/10.4
C724	4030017460	S.CER ECJ0EB1E102K	B	8.3/16
C725	4030017460	S.CER ECJ0EB1E102K	T	2.3/14.2
C727	4030017420	S.CER ECJ0EC1H470J	T	3.8/13
C728	4030017380	S.CER ECJ0EC1H050B	T	1.3/11.7
C729	4030017430	S.CER ECJ0EC1H101J	B	11.6/12.2
C731	4030017640	S.CER ECJ0EC1H150J	T	3.2/7.7
C732	4030017460	S.CER ECJ0EB1E102K	T	9.9/19.9
C733	4030017420	S.CER ECJ0EC1H470J	T	9.9/20.9
C734	4030018120	S.CER ECJ0EC1H110J	T	16.8/2.3
C742	4030017460	S.CER ECJ0EB1E102K	T	34.1/14.2
C744	4030017640	S.CER ECJ0EC1H150J	T	31.6/16.9
C745	4030017550	S.CER ECJ0EC1H1R5B	T	35.7/15.4
C746	4030017410	S.CER ECJ0EC1H240J	T	31.3/18.4
C748	4030017420	S.CER ECJ0EC1H470J	B	14.2/12.5
C750	4030018120	S.CER ECJ0EC1H110J	B	31.8/15.4
C751	4030017390	S.CER ECJ0EC1H180J	B	31.5/16.8
C752	4030017460	S.CER ECJ0EB1E102K	B	26.7/17.9
C753	4030017460	S.CER ECJ0EB1E102K	B	26.9/15.9
C754	4030017460	S.CER ECJ0EB1E102K	B	29.9/14.2
C755	4030017420	S.CER ECJ0EC1H470J	B	16.7/12.9
C756	4030017420	S.CER ECJ0EC1H470J	B	15.7/12.9
C757	4030017460	S.CER ECJ0EB1E102K	T	16.7/13.5
C758	4030017420	S.CER ECJ0EC1H470J	T	15.8/2.3
C759	4030017460	S.CER ECJ0EB1E102K	T	14.8/2.3
C760	4030017460	S.CER ECJ0EB1E102K	T	6.1/9.4
C761	4030017460	S.CER ECJ0EB1E102K	T	5.2/11.7
C763	4030016790	S.CER ECJ0EB1C103K	T	1.3/14.2
C767	4030017460	S.CER ECJ0EB1E102K	B	16.7/14.5
C768	4030017520	S.CER ECJ0EC1H0R3B	T	29.4/15.8

M.=Mounted side (T: Mounted on the Top side, B: Mounted on the Bottom side)

[PA UNIT]

REF NO.	ORDER NO.	DESCRIPTION	M.	H/V LOCATION
C769	4030017520	S.CER ECJ0EC1H0R3B	B	34.5/16.7
J701	6510024390	S.CNR IMSA-6176S-03Y900	B	6.3/9.7
J702	6910015890	CNR IMSA-9230B-1-02Z140-T		
F701	5210000900	S.FUS 0434003.NRP	B	10.9/19.6
EP710	0910058452	PCB B 6195B		
EP711	6910015370	S.BEA ACZ1005Y-102-T	T	1.7/12.9

[ANT UNIT]

REF NO.	ORDER NO.	DESCRIPTION	M.	H/V LOCATION
L801	6200008580	S.COL 0.30-1.4-6TL 32N	T	5.7/12.4
L802	6200008280	S.COL 0.30-1.7-7TL 50N	T	6.6/9
R801	7030005080	S.RES ERJ2GEJ 823 X (82 kΩ)	T	3.2/14.1
C801	4030017460	S.CER ECJ0EB1E102K	T	10/7
C802	4030017380	S.CER ECJ0EC1H050B	T	6.5/7.1
C803	4030017410	S.CER ECJ0EC1H240J	T	3.2/10.6
C807	4030017620	S.CER ECJ0EC1H100C	T	4/11.9
EP810	0910058461	PCB B 6196A		

[FUSE UNIT]

REF NO.	ORDER NO.	DESCRIPTION	M.	H/V LOCATION
L901	6200006190	S.COL BLM21PG300SN1D	T	10.2/6
C901	4030017460	S.CER ECJ0EB1E102K	T	6/6.6
J901	6910015880	CNR IMSA-9230B-1-02Z141-T		
EP910	0910058660	PCB B 6238		

[CHASSIS UNIT]

REF NO.	ORDER NO.	DESCRIPTION	M.	H/V LOCATION
J1	6910015910	CNR ANT CONNECTOR-104		
J2	6910015860	CNR IMSA-6277S-02A-G		
SP1	2510001060	SP K036NA500-47		
W1	8900009640	CBL OPC-963		

S.=Surface mount

SECTION 7 MECHANICAL PARTS AND DISASSEMBLY

7-1 CABINET PARTS

[MAIN UNIT]

REF.	ORDER. NO.	DESCRIPTION	QTY.
DS3	5030002760	L3-0200HAY-3	1
EP7	8930063020	SRCN-2721-SP-N-W	2
J2	6450002250	HSJ1456-010320	1
J3	6450001680	HSJ1120-010010	1
R315	7210003061	TP76N00N-15F-A103-2251A	1
			1
S2	2260002840	SKHLLFA010	1
S27	2250000180	EC10SP16-47	1
MC1	7700002480	SKB-2746LPC	1
MP3	8930061890	2721 LCD holder	1
MP4	8210020570	2721 reflector	1

[CHASSIS UNIT]

REF.	ORDER. NO.	DESCRIPTION	QTY.
SP1	2510001060	K036NA500-47	1
W1	8900009640	OPC-963	1
J1	6910015910	Antenna connector-104	1
J2	6910015860	IMSA-6277S-02A-G	1
MP1	8010019451	2721 chassis-1	1
MP2	8210020530	2721 T-front panel [F33GT], [F34GT]	1
	8210020730	2721 S-front panel [F33GS], [F34GS]	
MP8	8210020550	2721 rear panel	1
MP9	8310060760	2721 window plate	1
MP10	8930062620	2721 window sheet	1
MP12	8930061790	2721 keyboard [F33GT], [F34GT]	1
	8930062760	2721 4-key [F33GS], [F34GS]	1
MP13	8930061710	2721 main seal	1
MP14	8930063060	2721 terminal rubber	1
MP16	8930064660	2721 side plate (A)	1
MP17	8930061860	2721 top plate	1
MP20	8930061880	2721 mic sponge	1
MP21	8930059360	2600 release button	1
MP22	8930063030	2721 release plate	1
MP25	8830001720	2721 antenna nut	1
MP26	8810009220	Scerw B0 2 x 8 ZK (BT)	2
MP27	8810009560	Scerw M2 x 6 ZK	2
MP28	8810008970	Scerw M2 x 3.5 NI-ZU (BT)	11
MP29	8610011930	Knob N-318	1
MP30	8610011920	Knob N-319	1
MP31	8810010160	Scerw M3 x 5 SUS ZK	1
MP32	8930063051	2721 plate-1	1
MP33	8930046020	1123 sheet (A)-1	1
MP34	8930056540	Spring (AH)	2
MP35	8830001700	VR nut (Q)	1
MP36	8830001690	VR nut (R)	1
MP37	8510016360	2721 main shield	1
MP38	8510016350	2721 antenna plate	1
MP42	8930062960	White sheet (R)	1
MP47	8930048870	2056 A-sponge	1

Screw abbreviations B0, BT: Self-tapping
ZK: Black
SUS: Stainless
NI-ZU: Nickel-zinc

[PA UNIT]

REF.	ORDER. NO.	DESCRIPTION	QTY.
J702	6910015890	IMSA-9230B-1-02Z140-T	1

[FUSE UNIT]

REF.	ORDER. NO.	DESCRIPTION	QTY.
J901	6910015880	IMSA-9230B-1-02Z141-T	1

[ACCESSORIES]

REF.	ORDER. NO.	DESCRIPTION	QTY.
EP1	3310002321	FA-SC55V-1	1
EP2	0800007541	BP-231 ACC-1	1
MP1	8010019540	MB-94 ACC	1
MP3	8210020560	2721 JACK PANEL	1
MP4	8810004860	Screw M2 x 6 ZK	2
MP5	8930063051	2721 PLATE-1	1

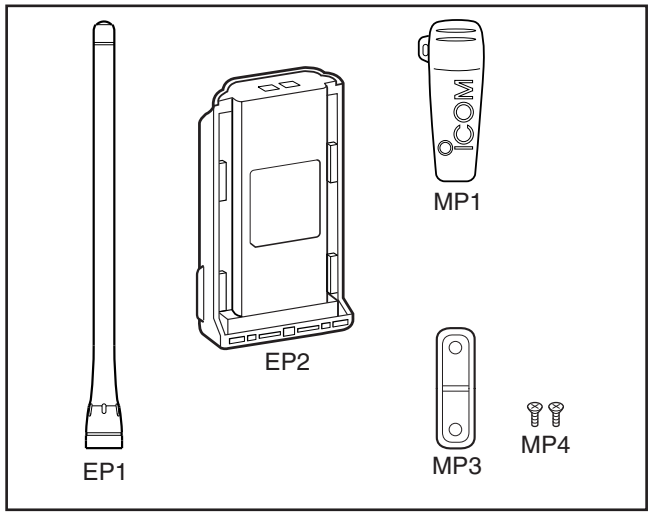

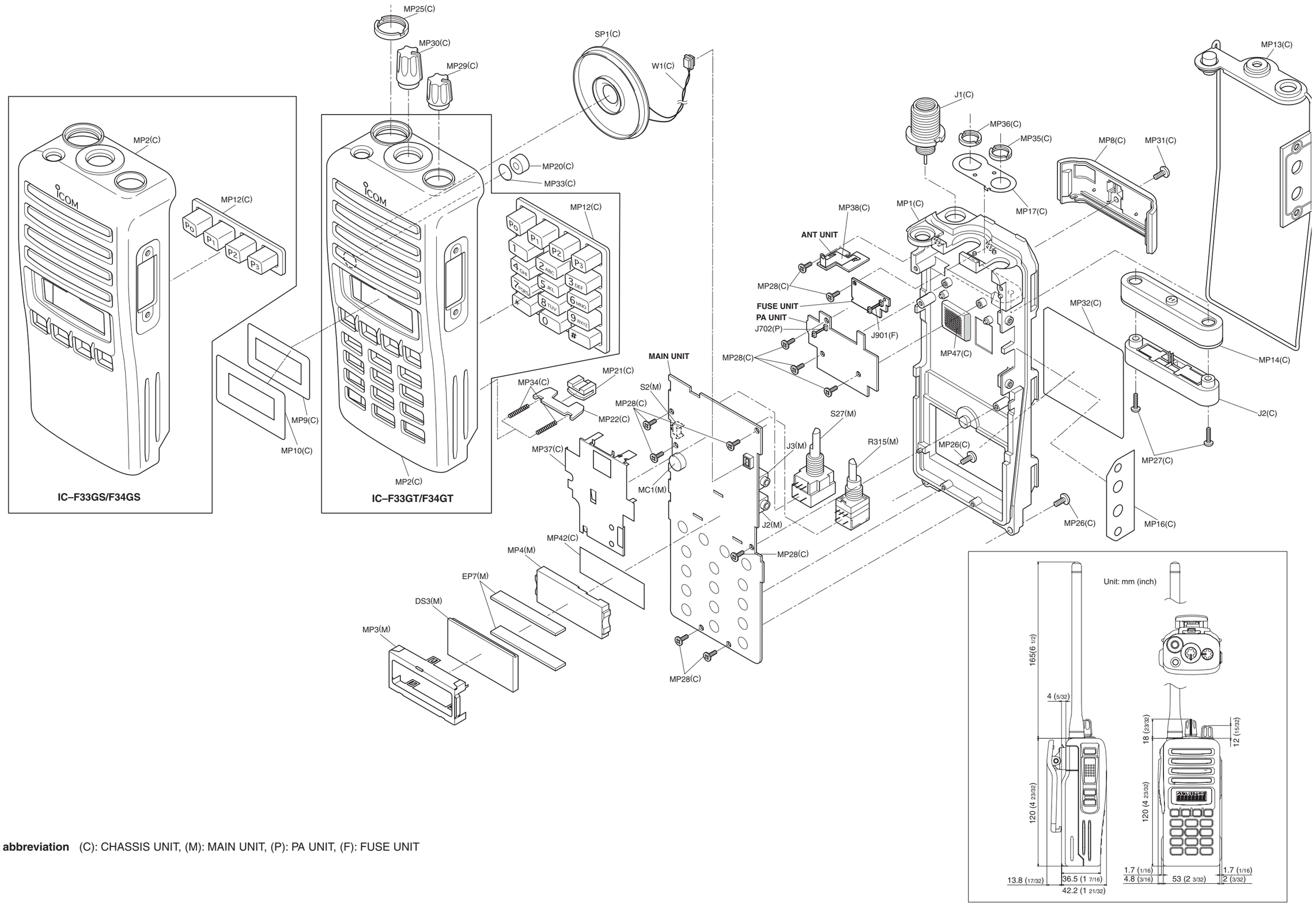

UNIT abbreviation (C): CHASSIS UNIT, (M): MAIN UNIT, (P): PA UNIT, (F): FUSE UNIT

SECTION 8 SEMICONDUCTOR INFORMATION

• TRANSISTORS AND FET'S

2SA1577 Q (Symbol: HP) 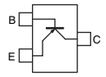	**2SB1132 Q** (Symbol: BAQ) 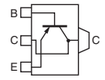	**2SC3356** (Symbol: R22) 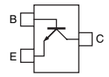	**2SC4116 BL** (Symbol: LL) 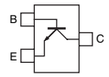	**2SC4215 O** (Symbol: QO) 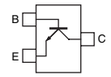
2SC4226 R25 (Symbol: R25) 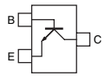	**2SC5006** (Symbol: 24) 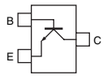	**2SK880 Y** (Symbol: XY) 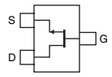	**2SK1829** (Symbol: K1) 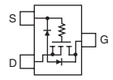	**2SK3019** (Symbol: KN) 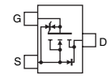
3SK293 (Symbol: UF) 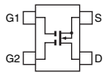	**3SK299 U73** (Symbol: U73) 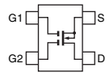	**RD01MUS1** (Symbol: K2) 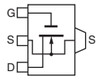	**RD07MVS1** (Symbol: RD07MVS1) 	**TPC6103** (Symbol: S3C) 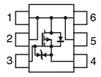
UNR9112J (Symbol: 6B) 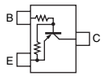	**UNR9113J** (Symbol: 6C) 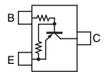	**UNR9210J** (Symbol: 8L) 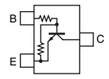	**UNR9213J** (Symbol: 8C) 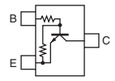	**XP1214** (Symbol: 9H) 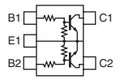
XP6501 AB (Symbol: 5N) 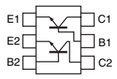				

• DIODES

1SS400 (Symbol: A) 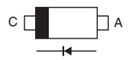	**1SS239** (Symbol: TC) 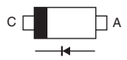	**1SV307** (Symbol: TX) 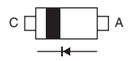	**DAN202 U** (Symbol: N) 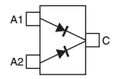	**HVC350B** (Symbol: B0) 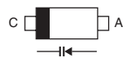
HVC375B (Symbol: B8) 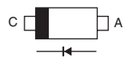	**HVC376B** (Symbol: B9) 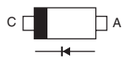	**MA2S077** (Symbol: S) 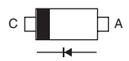	**MA2S111** (Symbol: A) 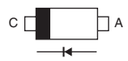	**MA2S728** (Symbol: B)
RB706F- 40 (Symbol: 3J) 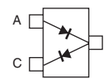				

SECTION 9 BOARD LAYOUTS

9-1 MAIN UNIT

- **TOP VIEW**

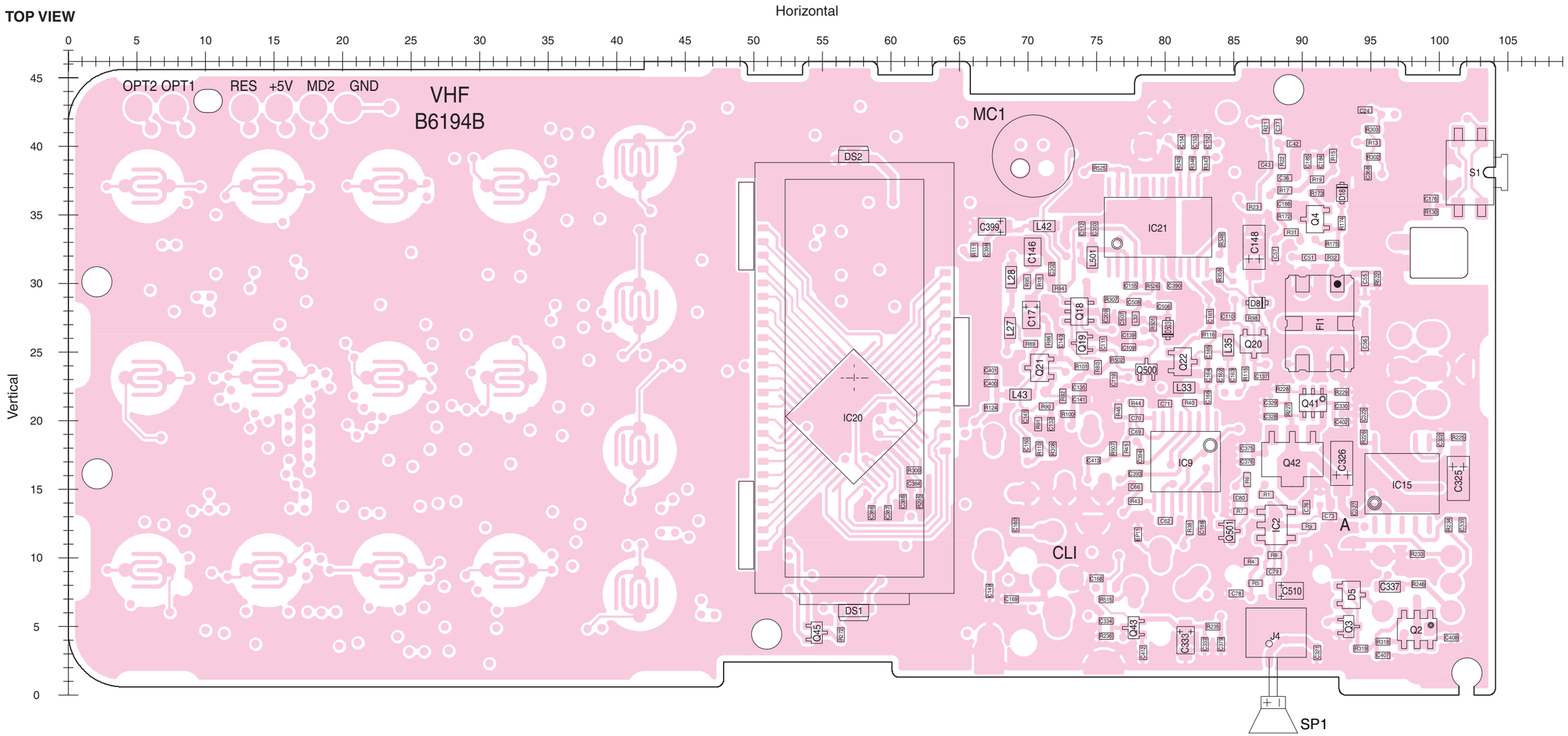

● **BOTTOM VIEW**

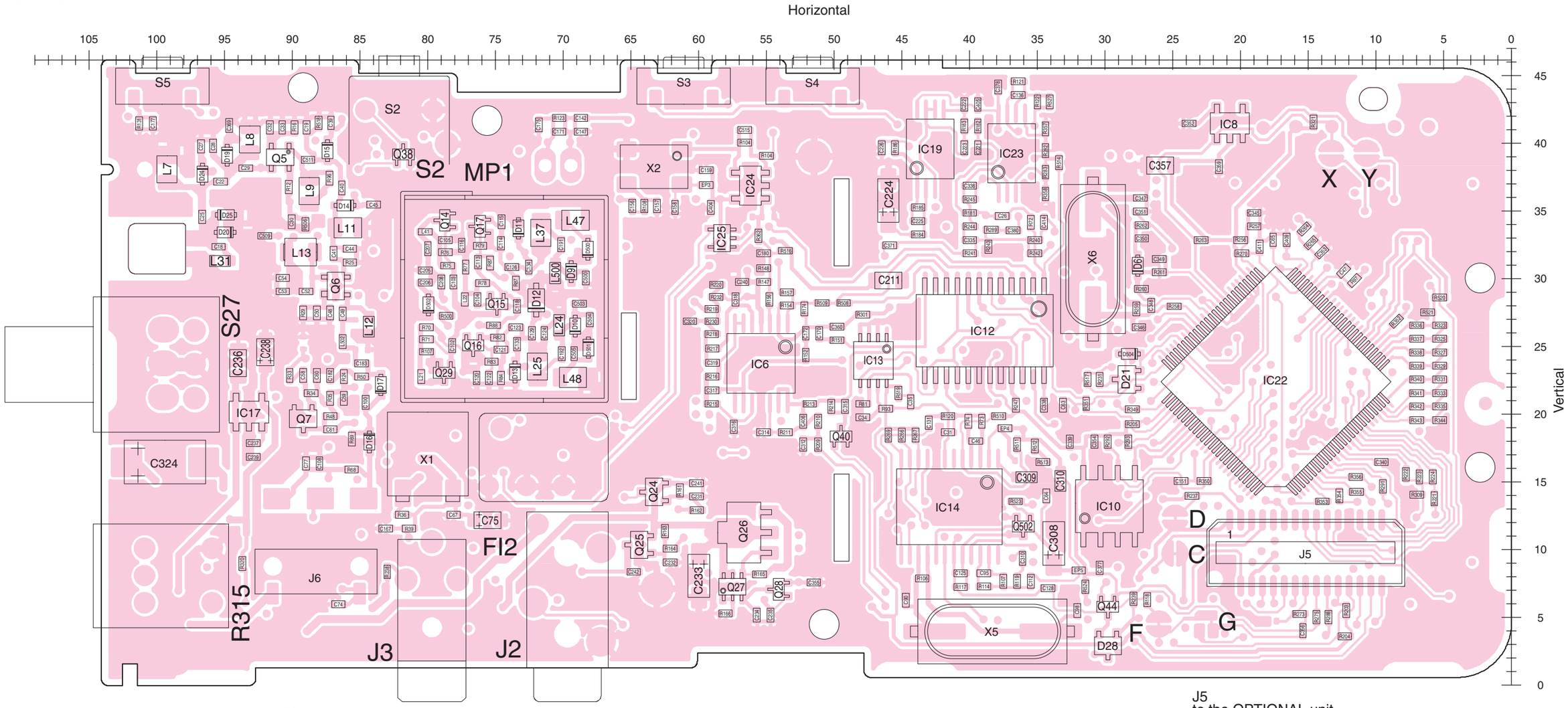

J6
to the PA unit

VCC	GND	P_DET

1 3

J5
to the OPTIONAL unit

1	PTTIN	PTTOUT	MICOUT	MICIN	NC	BUSY	NC	SIGOUT	OPT1	OPT2	OPT3	GND	OPV3	OPV2	OPV1	15
30	GND	+5V	VCC	MICMUTE	AFONOP	BEEPOUT	RXMUTE	DISCIN	AFOUT	REM	CCS	CIRQ	SO	SI	SCK	16

9-2 PA UNIT

- **TOP VIEW**

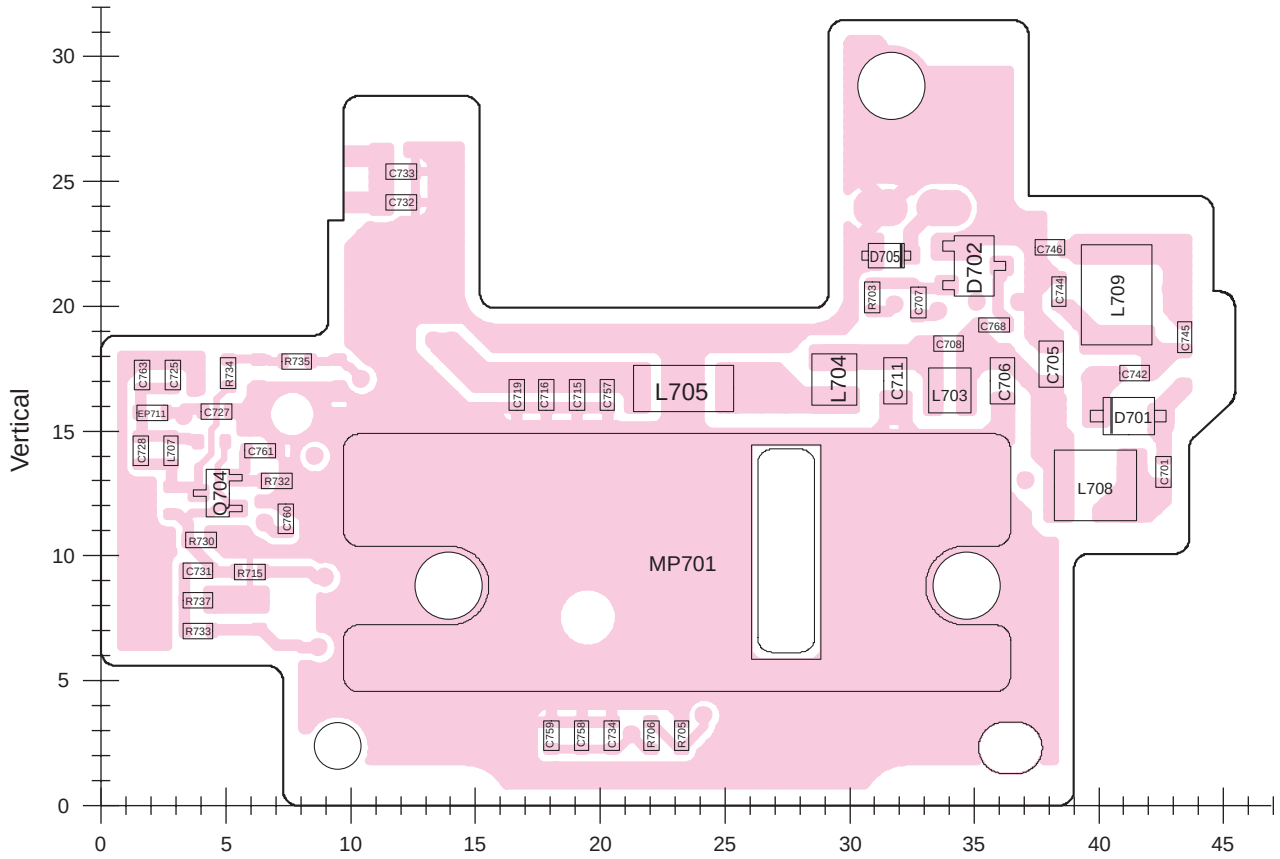

9-3 ANT UNIT

- **TOP VIEW**

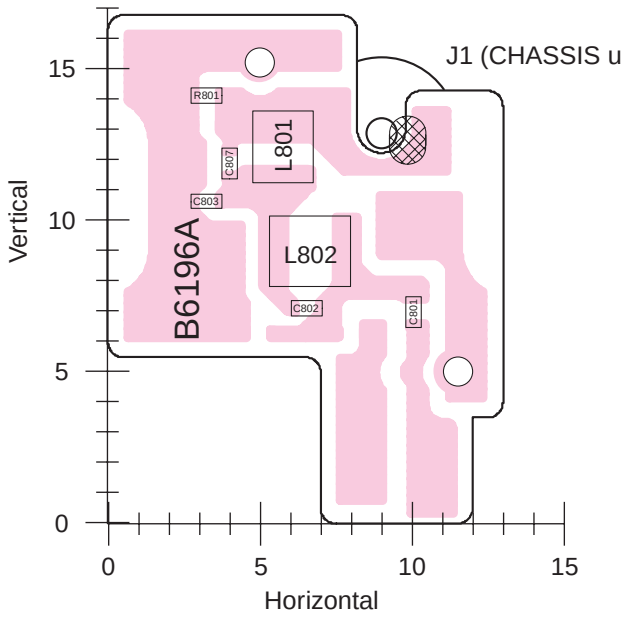

9-4 FUSE UNIT

- **TOP VIEW**

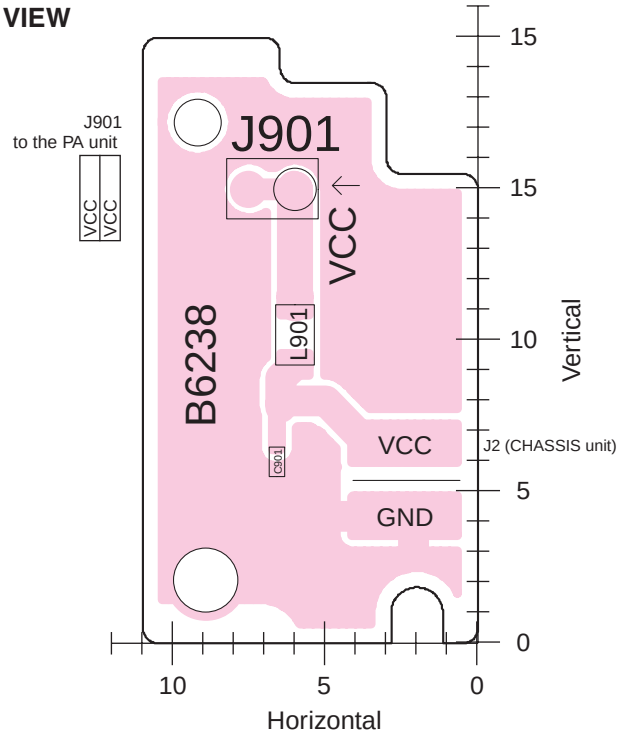

● **BOTTOM VIEW**

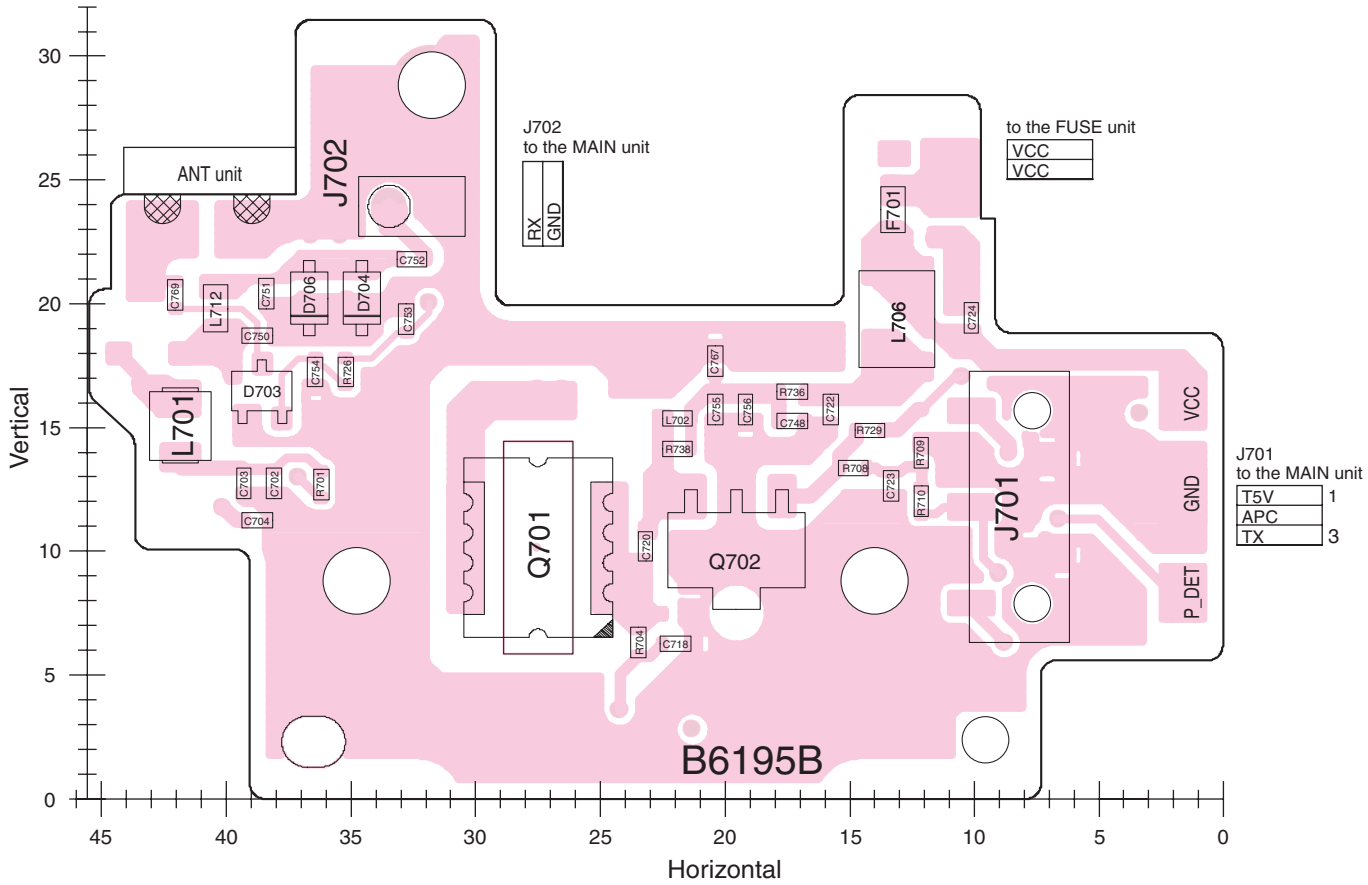

● **BOTTOM VIEW**

● **BOTTOM VIEW**

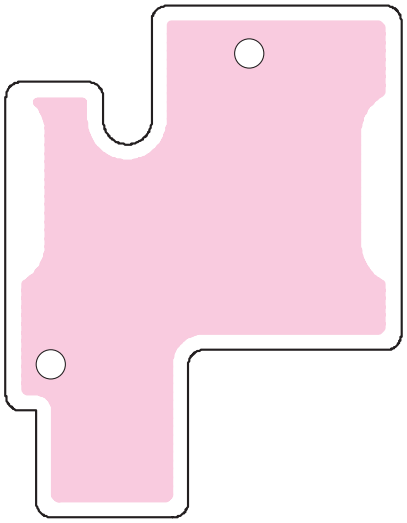

SECTION 10 BLOCK DIAGRAM

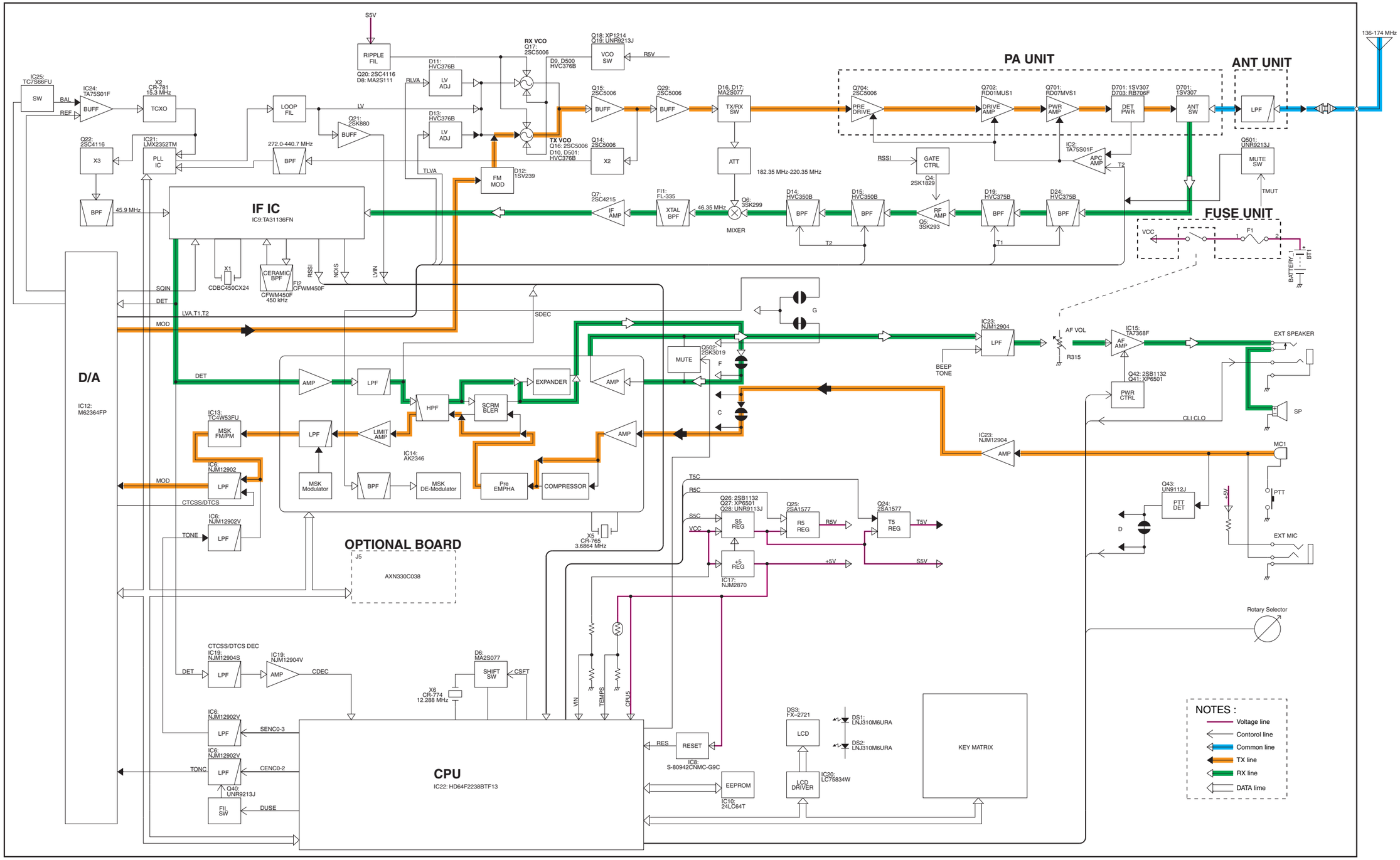

SECTION 11 VOLTAGE DIAGRAM

11-1 MAIN UNIT

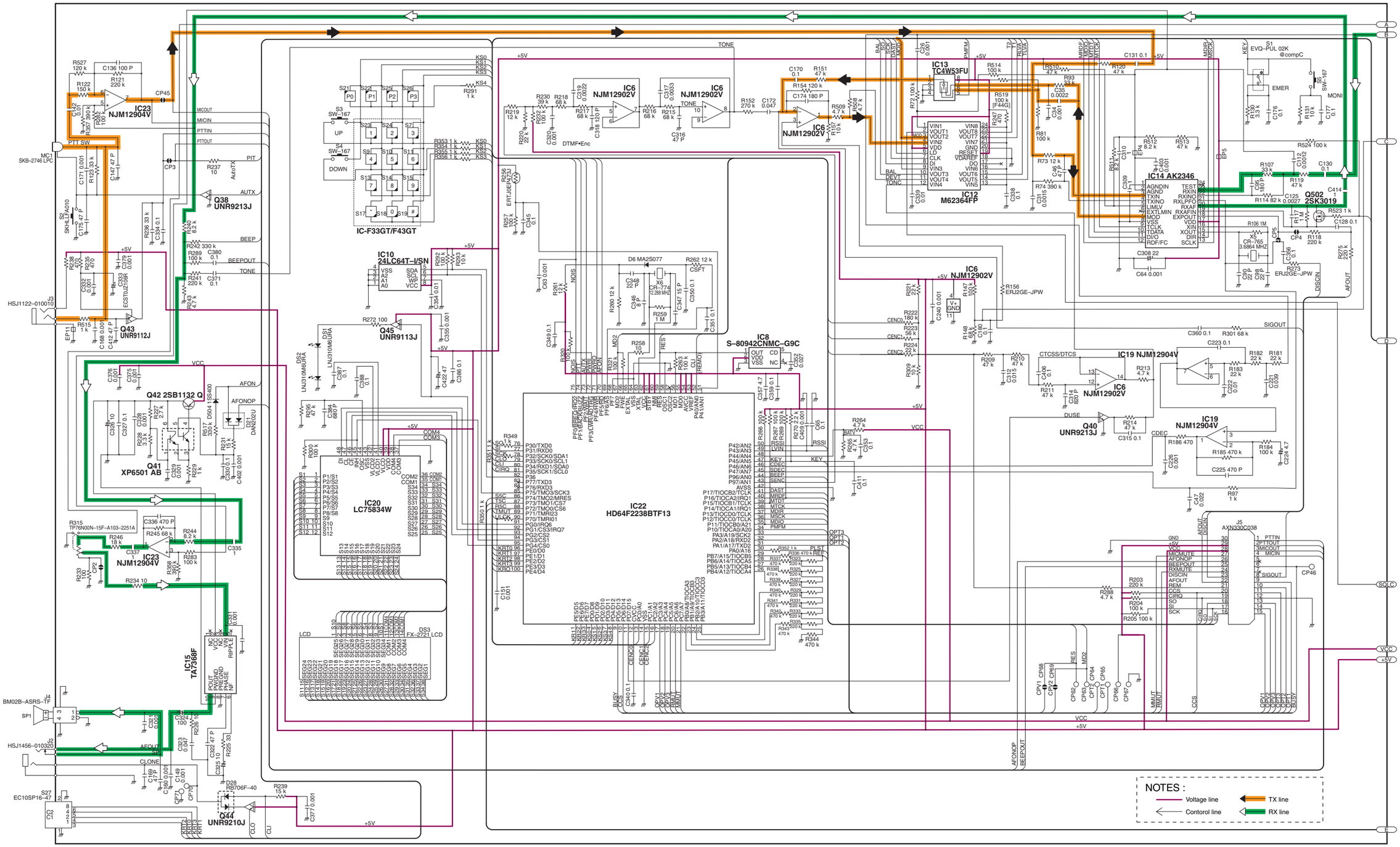

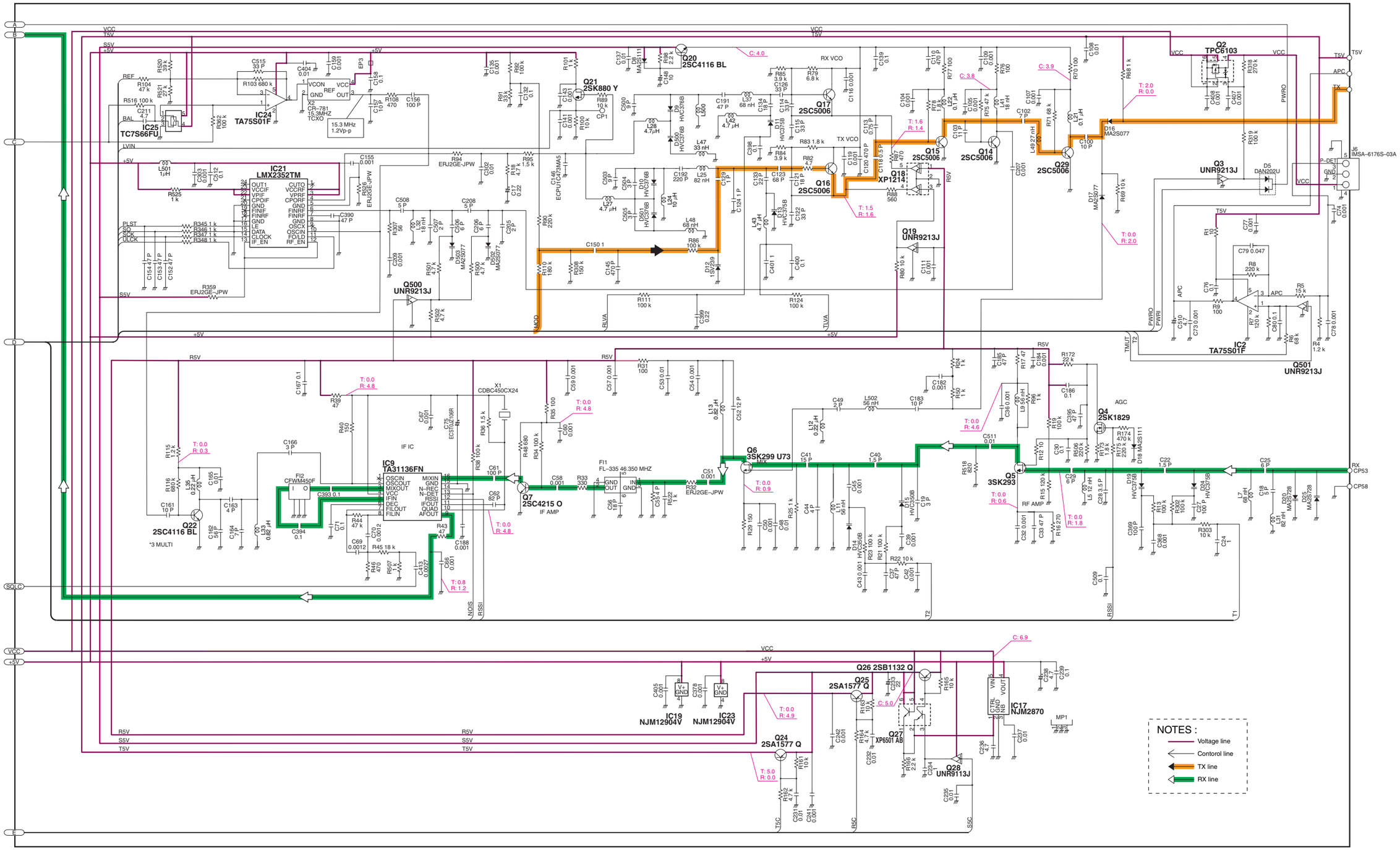
IC24
TA75S01F
IC25
TC7S66FU
IC21
LMX2352TM
Q21
2SK880 Y
Q20
2SC4116 BL
Q17
2SC5006
Q16
2SC5006
Q18
XP1214
Q15
2SC5006
Q14
2SC5006
Q29
2SC5006
Q19
UNR9213J
Q2
TPC6103
Q3
UNR9213J
Q500
UNR9213J
Q501
UNR9213J
IC2
TA75S01F
J6
IMSA-6176S-03A
X1
CDBC450CX24
IC9
TA31136FN
Q22
2SC4116 BL
*3 MULTI
Q7
2SC4215 O
IF AMP
Q6
3SK299 U73
MIX
Q5
3SK293
RF AMP
Q4
2SK1829
AGC
IF IC
FI1
FL-335 46.350 MHZ
FI2
CFWM450F
IC19
NJM12904V
IC23
NJM12904V
Q25
2SA1577 Q
Q26 2SB1132 Q
Q27
XP6501 AB
Q28
UNR9113J
Q24
2SA1577 Q
IC17
NJM2870
MP1
NOTES :
Voltage line
Contorol line
TX line
RX line

11-2 PA / ANT / FUSE UNITS

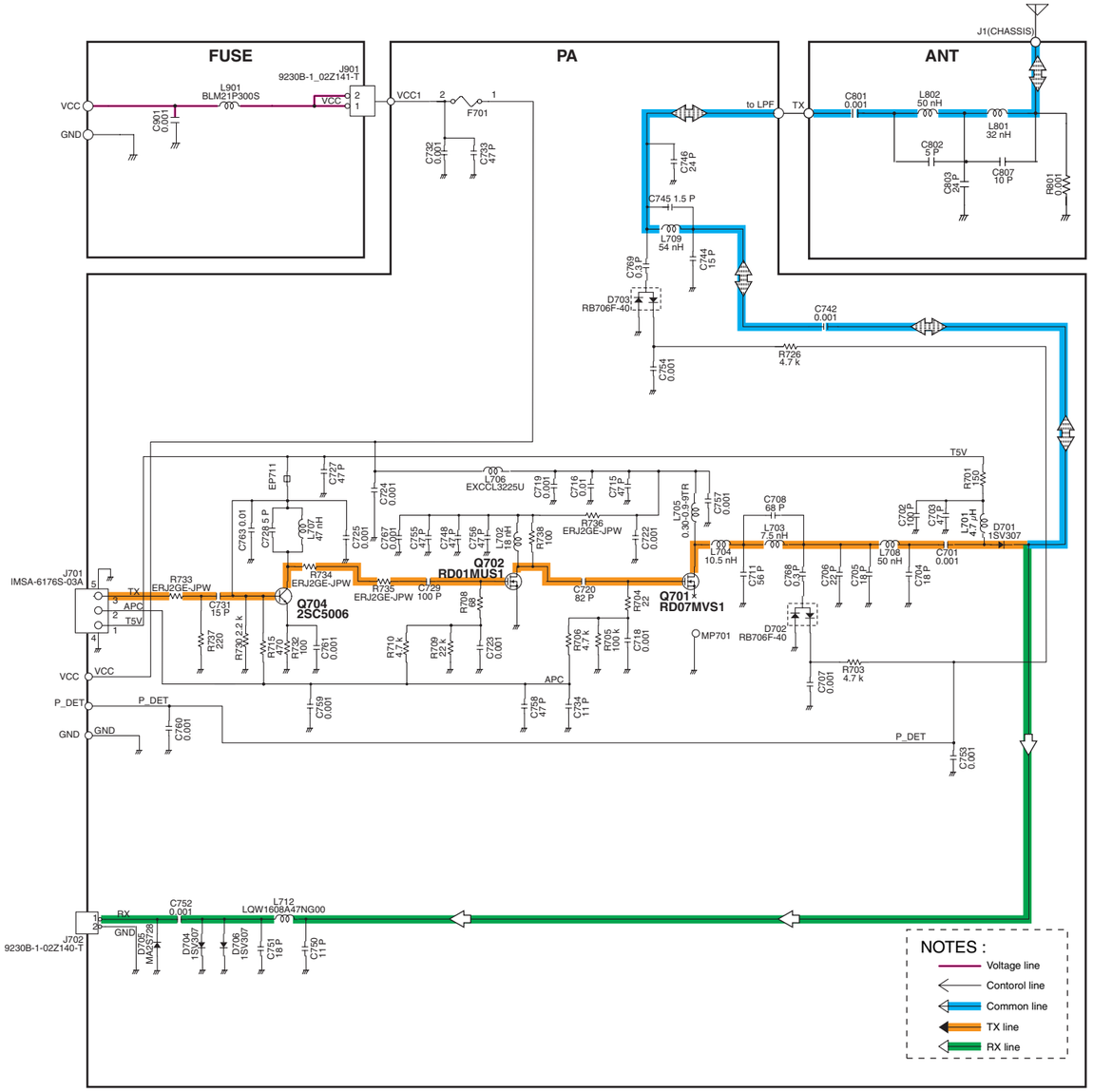

Icom Inc.

1-1-32, Kamiminami, Hirano-ku, Osaka 547-0003, Japan
Phone : +81 (06) 6793 5302
Fax : +81 (06) 6793 0013
URL : http://www.icom.co.jp/world/index.html

Icom America Inc.
<Corporate Headquarters>
2380 116th Avenue N.E., Bellevue, WA 98004, U.S.A.
Phone : +1 (425) 454-8155 Fax : +1 (425) 454-1509
URL : http://www.icomamerica.com
E-mail : sales@icomamerica.com
<Customer Service>
Phone : +1 (425) 454-7619

Icom Canada
Glenwood Centre #150-6165
Highway 17 Delta, B.C., V4K 5B8, Canada
Phone : +1 (604) 952-4266 Fax : +1 (604) 952-0090
URL : http://www.icomcanada.com
E-mail : info@icomcanada.com

Icom (Australia) Pty. Ltd.
A.B.N. 88 006 092 575
290-294 Albert Street, Brunswick, Victoria, 3056, Australia
Phone : +61 (03) 9387-0666 Fax : +61 (03) 9387-0022
URL : http://www.icom.net.au
E-mail : sales@icom.net.au

Icom New Zealand
146A Harris Road, East Tamaki,
Auckland, New Zealand
Phone : +64 (09) 274 4062 Fax : +64 (09) 274 4708
URL : http://www.icom.co.nz
E-mail : inquiries@icom.co.nz

Beijing Icom Ltd.
1305, Wanshang Plaza, Shijingshan Road, Beijing China
Phone : +86 (010) 6866 6337 Fax : +86 (010) 6866 3553
URL : http://www.bjicom.com
E-mail : bjicom@bjicom.com

Icom (Europe) GmbH
Communication Equipment
Himmelgeister Str. 100, D-40225 Düsseldorf, Germany
Phone : +49 (0211) 346047 Fax : +49 (0211) 333639
URL : http://www.icomeurope.com
E-mail : info@icomeurope.com

Icom Spain S.L
Crta. de Gracia a Manresa Km. 14,750
08190 Sant Cugat del Valles Barcelona, SPAIN
Phone : +34 (93) 590 26 70 Fax : +34 (93) 589 04 46
URL : http://www.icomspain.com
E-mail : icom@icomspain.com

Icom (UK) Ltd.
Unit 9, Sea St., Herne Bay, Kent, CT6 8LD, U.K.
Phone : +44 (01227) 741741 Fax : +44 (01227) 741742
URL : http://www.icomuk.co.uk
E-mail : info@icomuk.co.uk

Icom France S.a
Zac de la Plaine, 1, Rue Brindejonc des Moulinais
BP 5804, 31505 Toulouse Cedex, France
Phone : +33 (5) 61 36 03 03 Fax : +33 (5) 61 36 03 00
URL : http://www.icom-france.com
E-mail : icom@icom-france.com

Asia Icom Inc.
6F No.68, Sec. 1 Cheng-Teh Road, Taipei, Taiwan, R.O.C.
Phone : +886 (02) 2559 1899 Fax : +886 (02) 2559 1874
URL : http://www.asia-icom.com
E-mail : sales@asia-icom.com

Icom Polska
Sopot, 3 Maja 54 Poland
Phone : +48 (58) 550 7135 Fax : +48 (58) 551 0484
E-mail : icompolska@icompolska.com.pl

Count on us!

Icom Inc.
1-1-32, Kamiminami, Hirano-ku, Osaka, 547-0003, Japan

S-14113IZ-C1
© 2004 Icom Inc.